ORDER NO. KMS0101052S2

Service Manual

DIGITAL SUPER HYBRID SYSTEM

KX-TD1232E

(for United Kingdom)

Please file and use this supplement manual together with the service manual for model No.KX-TD1232

⚠ WARNING

This service information is designed for experienced repair technicians only and is not designed for use by the general public.
It does not contain warnings or cautions to advise non-technical individuals of potential dangers in attempting to service a product.
Products powered by electricity should be serviced or repaired only by experienced professional technicians. Any attempt to service or repair the product or products dealt with in this service information by anyone else could result in serious injury or death.

Panasonic

Note:Supplement-1~2 have already supplied with printed matter. So please refer to that.

1. CHANGES

1.1. Subject

Suffix	Reason for suffix change
F → G	Change of the software. (IC20/21:ROM Ver. P111I/P112I → P111J/P112J)
G → H	Change of the software. (IC20/21:ROM Ver. P111J/P112J → P111K/P112K)
Not used	Change of the power supply unit. (PQLP10005XA-UK → PSLP1150YA)
H → I	Change of the CPU board. (PQUP10441YB → PQUP10441YC)

1.2. Suffix location

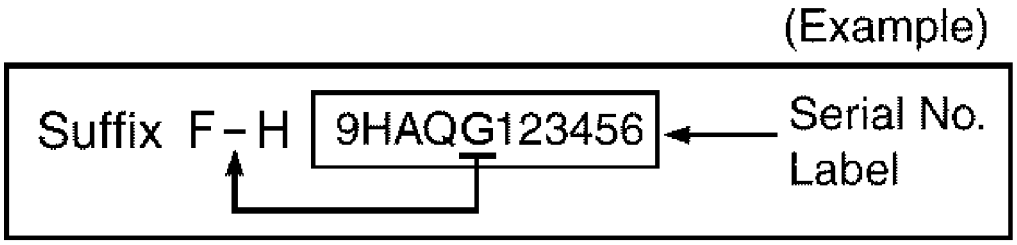

1.3. REPLACEMENT PARTS LIST

Reason for Change (Symbol:A) Following 1-8 reasons are indicated on the Notes in the bottom colu	
1. Improve performance	
2. Change of material or dimension	
3. To meet approved specification	
4. Standardization	
5. Addition	
6. Deletion	
7. Correction	
8. Other	

Interchangeability Code (Symbol:B) Following V-Z interchangeabilities are indicated on the Notes i bottom column.			
	Parts	Set Production	
V	Original → New New → Original	Early (before change) Late (after change)	Original or new parts may be used in early or late product Use original parts until exhausted, then stock new parts.
W	Original → New New → New	Early (before change) Late (after change)	Original parts may be used in early production sets only. parts may be used in early or late production sets. Use or parts where possible, then stock new parts.
X	Original → New New → New	Early (before change) Late (after change)	New parts only may be used in early or late production se Stock new parts.
Y	Original → New New → New	Early (before change) Late (after change)	Original parts may be used in early production sets only. parts may be used in late production sets only. Stock bot and new parts.
Z	Other		

Ref. No.	Parts No.		Part Name & description	Pcs	Remarks	Notes	
	Original Part	New part					
CABINET AND ELECTRICAL PARTS							
33	PSGT1376Y	PSGT1376X	NAME PLATE	1		8	Y
	PSGT1376X	PSGT1376V	NAME PLATE	1		8	X
ACCESSORIES AND PACKING MATERIALS							
A7	PSQX1047Z	PSQX1047P	INSTALLATION MANUAL	1		1	X
A8	PSQX1048Z	PSQX1048V	USER MANUAL	1		8	X
	PSQX1048V	PSQX1848Y	USER MANUAL	1		1	X
A22	----------	PSZXJS04S50	JACK KIT (50pieces) , 4P	1	Fig.1	5	
A23	----------	PSZXJS04S100	JACK KIT (100pieces) , 4P	1	Fig.1	5	
A24	----------	PSZXJS06S50	JACK KIT (50pieces) , 6P	1	Fig.1	5	
A25	----------	PSZXJS06S100	JACK KIT (100pieces) , 6P	1	Fig.1	5	
	----------	PSQX1921Z	ADDITIONAL USER MANUAL / (for KX-TD184E)	1		5	
CPU BOARD PARTS (All parts are shown bellow.)							
PCB1	PSWP1D1232E2	PSWP1D1232E3	CPU BOARD ASS'Y (RTL)	1		1	V
IC1	PQVI68301FCG	PQVI68301FCG	IC	1	*1		
IC2	PQVI620890F	PQVI620890F	IC	1	*1		
IC3	PQVIMT8980DE	PQVIMT8980DE	IC	1	*1		
IC6, IC7	PQVIMC45503P	PSVIMCL5480S	IC	2		1	Y
IC8	PQVIMC45503P	PSVIMCL5480S	IC	1		1	Y
IC9	PQVIS7860SG	PQVIS7860SG	IC	1	*1		
IC10, IC11	PQVINJM4558D	----------	IC	0		6	
IC12, IC14	PQVINJM4558D	PQVINJM4558D	IC	2	*1		
IC13	PQVIPS520C	PSVIPS600CMT	IC	1		1	Y
IC15	PQVIHD75188P	PQVIHD75188P	IC	1	*1		
IC16	PQVIHD75189P	PQVIHD75189P	IC	1	*1		
IC17	PSVITC7HT00A	PSVITC7HT00A	IC	1	*1		
IC18	PQVISN7L00S	PQVISN7L00S	IC	1	*1		
IC19	PSWI2D1232AL	PSWI2TD1232E	IC (ROM)	1		7	
IC20, IC21	PSWI1D1232E4	PSWI1D1232E4	IC (ROM KIT)	1	*1		
IC22, IC23	PQVITC5183SD	----------	IC	0		6	
IC24	PSVICX582MD	PSVITC5401AE	IC	1		1	Y
IC25	PSVICX582MD	PSVITC5401AE	IC	1		1	Y
IC26	PQVIMS6242BS	PQVIMS6242BS	IC	1	*1		
IC27	PQVINJM4558D	PQVINJM4558D	IC	1	*1		
IC29	PQVISN7L368M	PQVISN7L368M	IC	1	*1		
IC31	PQVISN7L640M	PQVISN7L640M	IC	1	*1		
IC32	PQVISN7L365S	PQVISN7L365S	IC	1	*1		
IC33, IC34	PQVISN7L368M	PQVISN7L368M	IC	2	*1		
IC35	PQVISN7L365S	PQVISN7L365S	IC	1	*1		
IC36	PQVIMB7HU04F	PQVIMB7HU04F	IC	1	*1		

IC37	PQVITC7H00F	PQVITC7H00F	IC	1	*1		
IC38	PQVISN7H74S	PQVISN7H74S	IC	1	*1		
IC39	PQVISN7L151M	PQVISN7L151M	IC	1	*1		
IC40	----------	PQVISN7L32S	IC	1		5	Y
Q5	PQVTDTA144EK	PQVTDTA144EK	TRANSISTOR (SI)	1	*1		
Q6	2SC2412K	2SC2412K	TRANSISTOR (SI)	1	*1		
Q7	2SC2412K	2SC2412K	TRANSISTOR (SI)	1	*1		
Q8	PQVTDTA143E	PQVTDTA143E	TRANSISTOR (SI)	1	*1		
Q9	PQVTDTC144E	PQVTDTC144E	TRANSISTOR (SI)	1	*1		
Q10	2SA933	2SA933	TRANSISTOR (SI) (or 2SA1317)	1	*1		
Q11	2SC2412K	2SC2412K	TRANSISTOR (SI)	1	*1		
Q12	2SC2878	2SC2878	TRANSISTOR (SI)	1	*1		
Q13	2SC2412K	2SC2412K	TRANSISTOR (SI)	1	*1		
Q14	2SC2878	2SC2878	TRANSISTOR (SI)	1	*1		
Q601	PQVTDTA144EK	PQVTDTA144EK	TRANSISTOR (SI)	1	*1		
Q602	PQVTDTC144E	PQVTDTC144E	TRANSISTOR (SI)	1	*1		
Q603	PQVTDTA144EK	PQVTDTA144EK	TRANSISTOR (SI)	1	*1		
Q604	PQVTDTC144E	PQVTDTC144E	TRANSISTOR (SI)	1	*1		
Q605	----------	PQVTDTC144E	TRANSISTOR (SI)	1		5	
Q606	----------	2SB1237R	TRANSISTOR (SI)	1		5	
Q607	----------	PQVTDTC143E	TRANSISTOR (SI)	1		5	
D1	MA4091	MA4091	DIODE (SI)	1	*1		
D3	MA723	MA723	DIODE (SI)	1	*1		
D4	PQVDAK03	PQVDAK03	DIODE (SI)	1	*1		
D11, D12	RLS71	RLS71	DIODE (SI)	2	*1		
D13, D14	MA4030	MA4030	DIODE (SI)	2	*1		
D15	MA4056	MA4056	DIODE (SI)	1	*1		
D16, D17	RLS71	RLS71	DIODE (SI)	2	*1		
D20, D21	MA723	MA723	DIODE (SI)	2	*1		
R4	PQ4R10XJ471	ERJ3GEYJ471	RESISTOR, 470 Ω	1		1	Y
R5	PQ4R10XJ472	ERJ3GEYJ472	RESISTOR, 4.7k Ω	1		1	Y
R6	PQ4R10XJ223	ERJ3GEYJ223	RESISTOR, 22k Ω	1		1	Y
R7	PQ4R10XJ103	ERJ3GEYJ103	RESISTOR, 10k Ω	1		1	Y
R8	PQ4R10XJ683	ERJ3GEYJ683	RESISTOR, 68k Ω	1		1	Y
R10	----------	ERJ3GEYJ224	RESISTOR, 220k Ω	1		5	
R11	----------	ERJ3GEYJ681	RESISTOR, 680 Ω	1		5	
R12	PQ4R10XJ393	ERJ3GEYJ393	RESISTOR, 39k Ω	1		1	Y
R13	PQ4R10XF1782	ERJ3GEYJ183	RESISTOR, 18k Ω	1		1	Y
R14	PQ4R10XJ104	ERJ3GEYJ104	RESISTOR, 100k Ω	1		1	Y
R15	PQ4R10XJ103	ERJ3GEYJ103	RESISTOR, 10k Ω	1		1	Y
R16	PQ4R10XJ274	ERJ3GEYJ274	RESISTOR, 270k Ω	1		1	Y
R17	PQ4R10XJ183	ERJ3GEYJ183	RESISTOR, 18k Ω	1		1	Y
R18	PQ4R10XJ103	ERJ3GEYJ103	RESISTOR, 10k Ω	1		1	Y

R19	PQ4R10XJ561	ERJ3GEYJ561	RESISTOR, 560 Ω	1		1	Y
R20	PQ4R10XJ105	ERJ3GEYJ105	RESISTOR, 1M Ω	1		1	Y
R21	PQ4R10XJ563	ERJ3GEYJ623	RESISTOR, 62k Ω	1		1	Y
R22	PQ4R10XJ104	ERJ3GEYJ913	RESISTOR, 91k Ω	1		1	Y
R23	PQ4R10XJ104	ERJ3GEYJ134	RESISTOR, 130k Ω	1		1	Y
R24	PQ4R10XJ124	ERJ3GEYJ154	RESISTOR, 150k Ω	1		1	Y
R25	PQ4R10XJ823	----------	RESISTOR, 82k Ω	0		6	
R26	PQ4R10XJ104	----------	RESISTOR, 100k Ω	0		6	
R27	PQ4R10XJ104	----------	RESISTOR, 100k Ω	0		6	
R28	PQ4R10XF1211	ERJ3GEYF122	RESISTOR, 1.2k Ω	1		1	Y
R29	PQ4R10XF1211	----------	RESISTOR, 1.21k Ω	0		6	
R30	PQ4R10XJ224	ERJ3GEYJ224	RESISTOR, 220k Ω	1		1	Y
R31	PQ4R10XF1401	----------	RESISTOR, 1.4k Ω	0		6	
R32	PQ4R10XJ823	ERJ3GEYJ154	RESISTOR, 150k Ω	1		1	Y
R33	PQ4R10XJ472	ERJ3GEYJ472	RESISTOR, 4.7k Ω	1		1	Y
R34	PQ4R10XJ333	ERJ3GEYJ333	RESISTOR, 33k Ω	1		1	Y
R35	PQ4R10XJ104	ERJ3GEYJ104	RESISTOR, 100k Ω	1		1	Y
R36	PQ4R10XJ124	ERJ3GEYJ124	RESISTOR, 120k Ω	1		1	Y
R37	PQ4R10XJ104	ERJ3GEYJ563	RESISTOR, 56k Ω	1		1	Y
R38	PQ4R10XJ104	ERJ3GEYJ104	RESISTOR, 100k Ω	1		1	Y
R39	PQ4R10XJ124	ERJ3GEYJ124	RESISTOR, 120k Ω	1		1	Y
R40	PQ4R10XJ104	ERJ3GEYJ104	RESISTOR, 100k Ω	1		1	Y
R48	PQ4R10XJ333	ERJ3GEYJ333	RESISTOR, 33k Ω	1		1	Y
R50	PQ4R10XJ224	ERJ3GEYJ224	RESISTOR, 220k Ω	1		1	Y
R51	PQ4R10XJ333	ERJ3GEYJ333	RESISTOR, 33k Ω	1		1	Y
R52	PQ4R10XJ472	ERJ3GEYJ472	RESISTOR, 4.7k Ω	1		1	Y
R53	PQ4R10XJ104	ERJ3GEYJ104	RESISTOR, 100k Ω	1		1	Y
R57	PQ4R10XJ102	ERJ3GEYJ102	RESISTOR, 1k Ω	1		1	Y
R59	PQ4R10XJ104	ERJ3GEYJ563	RESISTOR, 56k Ω	1		1	Y
R61	PQ4R10XJ103	ERJ3GEYJ103	RESISTOR, 10k Ω	1		1	Y
R62	PQ4R10XJ223	ERJ3GEYJ223	RESISTOR, 22k Ω	1		1	Y
R65	PQ4R10XJ561	ERJ3GEYJ561	RESISTOR, 560 Ω	1		1	Y
R66	PQ4R10XJ103	ERJ3GEYJ103	RESISTOR, 10k Ω	1		1	Y
R67	PQ4R10XJ103	ERJ3GEYJ103	RESISTOR, 10k Ω	1		1	Y
R68	PQ4R10XJ103	ERJ3GEYJ103	RESISTOR, 10k Ω	1		1	Y
R69	PQ4R10XJ103	ERJ3GEYJ103	RESISTOR, 10k Ω	1		1	Y
R70	PQ4R10XJ103	ERJ3GEYJ103	RESISTOR, 10k Ω	1		1	Y
R71	PQ4R10XJ103	ERJ3GEYJ103	RESISTOR, 10k Ω	1		1	Y
R72	PQ4R10XJ103	ERJ3GEYJ103	RESISTOR, 10k Ω	1		1	Y
R73	PQ4R10XJ103	ERJ3GEYJ103	RESISTOR, 10k Ω	1		1	Y
R74	PQ4R10XJ103	ERJ3GEYJ103	RESISTOR, 10k Ω	1		1	Y
R75	PQ4R10XJ103	ERJ3GEYJ103	RESISTOR, 10k Ω	1		1	Y
R76	PQ4R10XJ103	ERJ3GEYJ103	RESISTOR, 10k Ω	1		1	Y

R77	PQ4R10XJ103	ERJ3GEYJ103	RESISTOR, 10k Ω	1		1	Y
R78	PQ4R10XJ103	ERJ3GEYJ103	RESISTOR, 10k Ω	1		1	Y
R79	PQ4R10XJ103	ERJ3GEYJ103	RESISTOR, 10k Ω	1		1	Y
R83	PQRD1VJ151	PQRD1VJ151	RESISTOR, 150 Ω	1	*1		
R84	PQ4R10XJ152	ERJ3GEYJ152	RESISTOR, 1.5k Ω	1		1	Y
R85	PQ4R10XJ681	ERJ3GEYJ681	RESISTOR, 680 Ω	1		1	Y
R87	PQ4R10XJ103	ERJ3GEYJ103	RESISTOR, 10k Ω	1		1	Y
R91	PQ4R10XJ103	ERJ3GEYJ103	RESISTOR, 10k Ω	1		1	Y
R92	PQ4R10XJ103	ERJ3GEYJ103	RESISTOR, 10k Ω	1		1	Y
R93	PQ4R10XJ103	ERJ3GEYJ103	RESISTOR, 10k Ω	1		1	Y
R94	PQ4R10XJ103	ERJ3GEYJ103	RESISTOR, 10k Ω	1		1	Y
R96	PQ4R10XJ103	ERJ3GEYJ103	RESISTOR, 10k Ω	1		1	Y
R97	PQ4R10XJ103	ERJ3GEYJ103	RESISTOR, 10k Ω	1		1	Y
R110	PQ4R10XJ470	ERJ3GEYJ470	RESISTOR, 47 Ω	1		1	Y
R111	PQ4R10XJ470	ERJ3GEYJ470	RESISTOR, 47 Ω	1		1	Y
R112	PQ4R10XJ470	ERJ3GEYJ470	RESISTOR, 47 Ω	1		1	Y
R113	PQ4R10XJ103	ERJ3GEYJ103	RESISTOR, 10k Ω	1		1	Y
R114	PQ4R10XJ103	ERJ3GEYJ103	RESISTOR, 10k Ω	1		1	Y
R115	PQ4R10XJ222	ERJ3GEYJ222	RESISTOR, 2.2k Ω	1		1	Y
R116	PQ4R10XJ472	ERJ3GEYJ472	RESISTOR, 4.7k Ω	1		1	Y
R117	PQ4R10XJ103	ERJ3GEYJ103	RESISTOR, 10k Ω	1		1	Y
R118	PQ4R10XJ333	ERJ3GEYJ333	RESISTOR, 33k Ω	1		1	Y
R119	PQ4R10XJ103	ERJ3GEYJ103	RESISTOR, 10k Ω	1		1	Y
R120	PQ4R10XJ334	ERJ3GEYJ334	RESISTOR, 330k Ω	1		1	Y
R121	PQ4R10XJ222	ERJ3GEYJ222	RESISTOR, 2.2k Ω	1		1	Y
R122	PQ4R10XJ472	ERJ3GEYJ472	RESISTOR, 4.7k Ω	1		1	Y
R123	PQ4R10XJ103	ERJ3GEYJ103	RESISTOR, 10k Ω	1		1	Y
R124	PQ4R10XJ333	ERJ3GEYJ333	RESISTOR, 33k Ω	1		1	Y
R125	PQ4R10XJ103	ERJ3GEYJ103	RESISTOR, 10k Ω	1		1	Y
R126	PQ4R10XJ334	ERJ3GEYJ334	RESISTOR, 330k Ω	1		1	Y
R127	PQ4R10XJ472	ERJ3GEYJ472	RESISTOR, 4.7k Ω	1		1	Y
R128	PQ4R10XJ472	ERJ3GEYJ472	RESISTOR, 4.7k Ω	1		1	Y
R129	PQ4R10XJ470	ERJ3GEYJ470	RESISTOR, 47 Ω	1		1	Y
R130	PQ4R10XJ470	ERJ3GEYJ470	RESISTOR, 47 Ω	1		1	Y
R131	PQ4R10XJ470	ERJ3GEYJ470	RESISTOR, 47 Ω	1		1	Y
R132	PQ4R10XJ470	ERJ3GEYJ470	RESISTOR, 47 Ω	1		1	Y
R133	PQ4R10XJ470	ERJ3GEYJ470	RESISTOR, 47 Ω	1		1	Y
R134	PQ4R10XJ390	ERJ3GEYJ390	RESISTOR, 39 Ω	1		1	Y
R135	PQ4R10XJ470	ERJ3GEYJ470	RESISTOR, 47 Ω	1		1	Y
R136	PQ4R10XJ470	ERJ3GEYJ470	RESISTOR, 47 Ω	1		1	Y
R137	PQ4R10XJ470	ERJ3GEYJ470	RESISTOR, 47 Ω	1		1	Y
R138	PQ4R10XJ101	ERJ3GEYJ101	RESISTOR, 100 Ω	1		1	Y
R139	PQ4R10XJ101	ERJ3GEYJ101	RESISTOR, 100 Ω	1		1	Y

R140	PQ4R10XJ101	ERJ3GEYJ101	RESISTOR, 100 Ω	1		1	Y
R141	PQ4R10XJ101	ERJ3GEYJ101	RESISTOR, 100 Ω	1		1	Y
R142	PQ4R10XJ101	ERJ3GEYJ101	RESISTOR, 100 Ω	1		1	Y
R143	PQ4R10XJ101	ERJ3GEYJ101	RESISTOR, 100 Ω	1		1	Y
R144	PQ4R10XJ101	ERJ3GEYJ101	RESISTOR, 100 Ω	1		1	Y
R145	PQ4R10XJ101	ERJ3GEYJ101	RESISTOR, 100 Ω	1		1	Y
R146	PQ4R10XJ470	ERJ3GEYJ470	RESISTOR, 47 Ω	1		1	Y
R147	PQ4R10XJ470	ERJ3GEYJ470	RESISTOR, 47 Ω	1		1	Y
R148	PQ4R10XJ470	ERJ3GEYJ470	RESISTOR, 47 Ω	1		1	Y
R149	PQ4R10XJ470	ERJ3GEYJ470	RESISTOR, 47 Ω	1		1	Y
R150	PQ4R10XJ470	ERJ3GEYJ470	RESISTOR, 47 Ω	1		1	Y
R151	PQ4R10XJ470	ERJ3GEYJ470	RESISTOR, 47 Ω	1		1	Y
R152	PQ4R10XJ470	ERJ3GEYJ470	RESISTOR, 47 Ω	1		1	Y
R153	PQ4R10XJ470	ERJ3GEYJ470	RESISTOR, 47 Ω	1		1	Y
R154	PQ4R10XJ470	ERJ3GEYJ470	RESISTOR, 47 Ω	1		1	Y
R155	PQ4R10XJ470	ERJ3GEYJ470	RESISTOR, 47 Ω	1		1	Y
R156	PQ4R10XJ470	ERJ3GEYJ470	RESISTOR, 47 Ω	1		1	Y
R157	PQ4R10XJ470	ERJ3GEYJ470	RESISTOR, 47 Ω	1		1	Y
R158	PQ4R10XJ470	ERJ3GEYJ470	RESISTOR, 47 Ω	1		1	Y
R159	PQ4R10XJ470	ERJ3GEYJ470	RESISTOR, 47 Ω	1		1	Y
R160	PQ4R10XJ470	ERJ3GEYJ470	RESISTOR, 47 Ω	1		1	Y
R161	PQ4R10XJ390	ERJ3GEYJ390	RESISTOR, 39 Ω	1		1	Y
R162	PQ4R10XJ330	ERJ3GEYJ330	RESISTOR, 33 Ω	1		1	Y
R163	PQ4R10XJ560	ERJ3GEYJ560	RESISTOR, 56 Ω	1		1	Y
R164	PQ4R10XJ560	ERJ3GEYJ560	RESISTOR, 56 Ω	1		1	Y
R165	PQ4R10XJ560	ERJ3GEYJ560	RESISTOR, 56 Ω	1		1	Y
R166	PQ4R10XJ560	ERJ3GEYJ560	RESISTOR, 56 Ω	1		1	Y
R167	PQ4R10XJ560	ERJ3GEYJ560	RESISTOR, 56 Ω	1		1	Y
R168	PQ4R10XJ560	ERJ3GEYJ560	RESISTOR, 56 Ω	1		1	Y
R169	PQ4R10XJ560	ERJ3GEYJ560	RESISTOR, 56 Ω	1		1	Y
R170	PQ4R10XJ560	ERJ3GEYJ560	RESISTOR, 56 Ω	1		1	Y
R171	PQ4R10XJ560	ERJ3GEYJ560	RESISTOR, 56 Ω	1		1	Y
R172	PQ4R10XJ560	ERJ3GEYJ560	RESISTOR, 56 Ω	1		1	Y
R173	PQ4R10XJ560	ERJ3GEYJ560	RESISTOR, 56 Ω	1		1	Y
R174	PQ4R10XJ560	ERJ3GEYJ560	RESISTOR, 56 Ω	1		1	Y
R175	PQ4R10XJ560	ERJ3GEYJ560	RESISTOR, 56 Ω	1		1	Y
R176	PQ4R10XJ560	ERJ3GEYJ560	RESISTOR, 56 Ω	1		1	Y
R177	PQ4R10XJ560	ERJ3GEYJ560	RESISTOR, 56 Ω	1		1	Y
R178	PQ4R10XJ560	ERJ3GEYJ560	RESISTOR, 56 Ω	1		1	Y
R179	PQ4R10XJ560	ERJ3GEYJ560	RESISTOR, 56 Ω	1		1	Y
R180	PQ4R10XJ560	ERJ3GEYJ560	RESISTOR, 56 Ω	1		1	Y
R181	PQ4R10XJ560	ERJ3GEYJ560	RESISTOR, 56 Ω	1		1	Y
R182	PQ4R10XJ560	ERJ3GEYJ560	RESISTOR, 56 Ω	1		1	Y

R183	PQ4R10XJ560	ERJ3GEYJ560	RESISTOR, 56 Ω	1		1	Y
R184	PQ4R10XJ560	ERJ3GEYJ560	RESISTOR, 56 Ω	1		1	Y
R185	PQ4R10XJ560	ERJ3GEYJ560	RESISTOR, 56 Ω	1		1	Y
R186	PQ4R10XJ560	ERJ3GEYJ560	RESISTOR, 56 Ω	1		1	Y
R187	PQ4R10XJ560	ERJ3GEYJ560	RESISTOR, 56 Ω	1		1	Y
R188	PQ4R10XJ560	ERJ3GEYJ560	RESISTOR, 56 Ω	1		1	Y
R189	PQ4R10XJ560	ERJ3GEYJ560	RESISTOR, 56 Ω	1		1	Y
R190	PQ4R10XJ560	ERJ3GEYJ560	RESISTOR, 56 Ω	1		1	Y
R191	PQ4R10XJ560	ERJ3GEYJ560	RESISTOR, 56 Ω	1		1	Y
R192	PQ4R10XJ560	ERJ3GEYJ560	RESISTOR, 56 Ω	1		1	Y
R193	PQ4R10XJ560	ERJ3GEYJ560	RESISTOR, 56 Ω	1		1	Y
R194	PQ4R10XJ560	ERJ3GEYJ560	RESISTOR, 56 Ω	1		1	Y
R195	PQ4R10XJ560	ERJ3GEYJ560	RESISTOR, 56 Ω	1		1	Y
R196	PQ4R10XJ560	ERJ3GEYJ560	RESISTOR, 56 Ω	1		1	Y
R197	PQ4R10XJ560	ERJ3GEYJ560	RESISTOR, 56 Ω	1		1	Y
R198	PQ4R10XJ560	ERJ3GEYJ560	RESISTOR, 56 Ω	1		1	Y
R199	PQ4R10XJ560	ERJ3GEYJ560	RESISTOR, 56 Ω	1		1	Y
R200	PQ4R10XJ560	ERJ3GEYJ560	RESISTOR, 56 Ω	1		1	Y
R201	PQ4R10XJ102	ERJ3GEYJ102	RESISTOR, 1k Ω	1		1	Y
R202	PQ4R10XJ102	ERJ3GEYJ102	RESISTOR, 1k Ω	1		1	Y
R203	PQ4R10XJ102	ERJ3GEYJ102	RESISTOR, 1k Ω	1		1	Y
R204	PQ4R10XJ103	ERJ3GEYJ103	RESISTOR, 10k Ω	1		1	Y
R205	PQ4R10XJ103	ERJ3GEYJ103	RESISTOR, 10k Ω	1		1	Y
R206	PQ4R10XJ103	ERJ3GEYJ103	RESISTOR, 10k Ω	1		1	Y
R207	PQ4R10XJ103	ERJ3GEYJ103	RESISTOR, 10k Ω	1		1	Y
R208	PQ4R10XJ103	ERJ3GEYJ103	RESISTOR, 10k Ω	1		1	Y
R209	PQ4R10XJ103	ERJ3GEYJ103	RESISTOR, 10k Ω	1		1	Y
R210	PQ4R10XJ103	ERJ3GEYJ103	RESISTOR, 10k Ω	1		1	Y
R211	PQ4R10XJ103	ERJ3GEYJ103	RESISTOR, 10k Ω	1		1	Y
R212	PQ4R10XJ103	ERJ3GEYJ103	RESISTOR, 10k Ω	1		1	Y
R213	PQ4R10XJ103	ERJ3GEYJ103	RESISTOR, 10k Ω	1		1	Y
R214	PQ4R10XJ103	ERJ3GEYJ103	RESISTOR, 10k Ω	1		1	Y
R215	PQ4R10XJ103	ERJ3GEYJ103	RESISTOR, 10k Ω	1		1	Y
R216	PQ4R10XJ103	ERJ3GEYJ103	RESISTOR, 10k Ω	1		1	Y
R217	PQ4R10XJ103	ERJ3GEYJ103	RESISTOR, 10k Ω	1		1	Y
R218	PQ4R10XJ103	ERJ3GEYJ103	RESISTOR, 10k Ω	1		1	Y
R219	PQ4R10XJ103	ERJ3GEYJ103	RESISTOR, 10k Ω	1		1	Y
R220	PQ4R10XJ223	ERJ3GEYJ223	RESISTOR, 22k Ω	1		1	Y
R221	PQ4R10XJ222	ERJ3GEYJ222	RESISTOR, 2.2k Ω	1		1	Y
R222	PQ4R10XJ103	ERJ3GEYJ103	RESISTOR, 10k Ω	1		1	Y
R223	PQ4R10XJ223	ERJ3GEYJ223	RESISTOR, 22k Ω	1		1	Y
R224	PQ4R10XJ105	ERJ3GEYJ105	RESISTOR, 1M Ω	1		1	Y
R225, R226	PQ4R10XJ330	ERJ3GEYJ330	RESISTOR, 33 Ω	2		1	Y

R227	PQ4R10XJ223	ERJ3GEYJ223	RESISTOR, 22k Ω	1		1	Y
R228	PQ4R10XJ103	ERJ3GEYJ103	RESISTOR, 10k Ω	1		1	Y
R229	PQ4R10XJ560	ERJ3GEYJ560	RESISTOR, 56 Ω	1		1	Y
R601, R602	PQ4R10XJ104	ERJ3GEYJ104	RESISTOR, 100k Ω	2		1	Y
R603	PQ4R10XJ331	ERJ3GEYJ331	RESISTOR, 300 Ω	1		1	Y
R604	PQ4R10XJ151	ERJ3GEYJ151	RESISTOR, 150 Ω	1		1	Y
R605	PQ4R10XJ824	ERJ3GEYJ824	RESISTOR, 820k Ω	1		1	Y
R606	PQ4R10XJ223	ERJ3GEYJ223	RESISTOR, 22k Ω	1		1	Y
R608	PQ4R10XJ124	ERJ3GEYJ124	RESISTOR, 120k Ω	1		1	Y
R609	PQ4R10XJ223	ERJ3GEYJ223	RESISTOR, 22k Ω	1		1	Y
R610, R611	PQ4R10XJ223	ERJ3GEYJ223	RESISTOR, 22k Ω	2		1	Y
R704	----------	ERJ3GEYJ103	RESISTOR, 10k Ω	1		5	
R705	----------	PQRD1VJ220	RESISTOR, 22 Ω	1		5	
R706	----------	ERJ3GEY0R00	RESISTOR, 0 Ω	1		5	
R707	----------	ERJ3GEYJ561	RESISTOR, 560 Ω	1		5	
R709	----------	ERJ3GEYJ472	RESISTOR, 4.7k Ω	1		5	
R715	----------	ERJ3GEY0R00	RESISTOR, 0 Ω	1		5	
J1, J3	PQ4R10XJ000	ERJ3GEY0R00	RESISTOR, 0 Ω	2		1	Y
J6	PQ4R10XJ000	----------	RESISTOR, 0 Ω	0		6	
J16	PQ4R10XJ223	ERJ3GEYJ223	RESISTOR, 22k Ω	1		1	Y
C1	EECFE5R5474	EECFE5R5474	CAPACITOR, 0.47 μ F	1	*1		
C2	ECEA1EU4R7	ECEA1EU4R7	CAPACITOR, 4.7 μ F	1	*1		
C3	ECEA1HN3R3S	ECEA1HN3R3S	CAPACITOR, 3.3 μ F	1	*1		
C8	ECQV1H104JZ	ECQV1H104JZ	CAPACITOR, 0.1 μ F	1	*1		
C9	ECQV1H104JZ	ECQV1H104JZ	CAPACITOR, 0.1 μ F	1	*1		
C11	PQCUV1E104MD	PQCUVlH105JC	CAPACITOR, 1 μ F	1		1	Y
C12	PQCUV1H101JC	ECUV1H101JCV	CAPACITOR, 100pF	1		1	Y
C13	PQCUV1H682KB	----------	CAPACITOR, 0.0068 μ F	0		6	
C14	PQCUV1H680JC	ECUV1H680JCV	CAPACITOR, 68pF	1		1	Y
C16	PQCUV1H101JC	ECUV1H101JCV	CAPACITOR, 100pF	1		1	Y
C17	PQCUV1E104MD	----------	CAPACITOR, 0.1 μ F	0		6	
C19	PQCUV1H101JC	ECUV1H101JCV	CAPACITOR, 100pF	1		1	Y
C20	PQCUV1H332KB	ECUV1H332KBV	CAPACITOR, 0.0033 μ F	1		1	Y
C21	PQCUV1E104MD	----------	CAPACITOR, 0.1 μ F	0		6	
C22	PQCUV1H101JC	ECUV1H101JCV	CAPACITOR, 100pF	1		1	Y
C23	PQCUV1H101JC	ECUV1H101JCV	CAPACITOR, 100pF	1		1	Y
C24	PQCUV1H332KB	ECUV1H332KBV	CAPACITOR, 0.0033 μ F	1		1	Y
C25	PQCUV1E104MD	ECUV1C104KBV	CAPACITOR, 0.1 μ F	1		1	Y
C26	PQCUV1E104MD	ECUV1C104KBV	CAPACITOR, 0.1 μ F	1		1	Y
C27	PQCUV1H102J	ECUV1H102KBV	CAPACITOR, 0.001 μ F	1		1	Y
C28	PQCUV1E104MD	ECUV1C104KBV	CAPACITOR, 0.1 μ F	1		1	Y
C29	PQCUV1H101JC	ECUV1H101JCV	CAPACITOR, 100pF	1		1	Y

C30	PQCUV1E104MD	ECUV1C104KBV	CAPACITOR, 0.1 μ F	1		1	Y
C31	PQCUV1H102J	ECUV1H102KBV	CAPACITOR, 0.001 μ F	1		1	Y
C33	----------	ECUV1C104KBV	CAPACITOR, 0.1 μ F	1		5	
C34	----------	ECUV1C104KBV	CAPACITOR, 0.1 μ F	1		5	
C35	PQCUV1H223KB	ECUV1C104KBV	CAPACITOR, 0.1 μ F	1		1	Y
C36	PQCUV1H223KB	ECUV1C104KBV	CAPACITOR, 0.1 μ F	1		1	Y
C37	PQCUV1H223KB	ECUV1C104KBV	CAPACITOR, 0.1 μ F	1		1	Y
C38	PQCUV1H223KB	ECUV1C104KBV	CAPACITOR, 0.1 μ F	1		1	Y
C39	PQCUV1H200JC	ECUV1H200JCV	CAPACITOR, 20pF	1		1	Y
C40	PQCUV1H223KB	ECUV1H223KB	CAPACITOR, 0.022 μ F	1		1	Y
C41	PQCUV1H223KB	ECUV1H223KB	CAPACITOR, 0.022 μ F	1		1	Y
C44	PQCUV1H223KB	ECUV1H223KB	CAPACITOR, 0.022 μ F	1		1	Y
C45	PQCUV1H223KB	ECUV1H223KB	CAPACITOR, 0.022 μ F	1		1	Y
C46	PQCUV1H223KB	ECUV1H223KB	CAPACITOR, 0.022 μ F	1		1	Y
C47	PQCUV1H223KB	ECUV1H223KB	CAPACITOR, 0.022 μ F	1		1	Y
C50	ECEA1AU331	ECEA1AU331	CAPACITOR, 330	1	*1		
C53	PQCUV1H180JC	ECUV1H180JCV	CAPACITOR, 18pF	1		1	Y
C54	PQCUV1H180JC	ECUV1H180JCV	CAPACITOR, 18pF	1		1	Y
C55	PQCUV1H223KB	ECUV1H223KB	CAPACITOR, 0.022 μ F	1		1	Y
C56	PQCUV1H223KB	ECUV1H223KB	CAPACITOR, 0.022 μ F	1		1	Y
C59	ECEA1HU010	ECEA1HU010	CAPACITOR, 1 μ F	1	*1		
C60	ECEA1HU010	ECEA1HU010	CAPACITOR, 1 μ F	1	*1		
C61	ECEA1HU010	ECEA1HU010	CAPACITOR, 1 μ F	1	*1		
C62	ECEA1HU010	ECEA1HU010	CAPACITOR, 1 μ F	1	*1		
C63	ECEA1HU010	ECEA1HU010	CAPACITOR, 1 μ F	1	*1		
C64	PQCUV1H223KB	ECUV1H223KB	CAPACITOR, 0.022 μ F	1		1	Y
C66	ECEA1AU101	ECEA1AU101	CAPACITOR, 100 μ F	1	*1		
C67	PQCUV1H223KB	ECUV1H223KB	CAPACITOR, 0.022 μ F	1		1	Y
C68	PQCUV1H223KB	ECUV1H223KB	CAPACITOR, 0.022 μ F	1		1	Y
C70	PQCUV1H223KB	ECUV1H223KB	CAPACITOR, 0.022 μ F	1		1	Y
C71	PQCUV1H223KB	ECUV1H223KB	CAPACITOR, 0.022 μ F	1		1	Y
C72	PQCUV1H223KB	ECUV1H223KB	CAPACITOR, 0.022 μ F	1		1	Y
C80	PQCUV1H200JC	ECUV1H200JCV	CAPACITOR, 20pF	1		1	Y
C81	PQCUV1H223KB	ECUV1H223KB	CAPACITOR, 0.022 μ F	1		1	Y
C82	PQCUV1H223KB	ECUV1H223KB	CAPACITOR, 0.022 μ F	1		1	Y
C83	PQCUV1H223KB	ECUV1H223KB	CAPACITOR, 0.022 μ F	1		1	Y
C84	PQCUV1H223KB	ECUV1H223KB	CAPACITOR, 0.022 μ F	1		1	Y
C85	PQCUV1H223KB	ECUV1H223KB	CAPACITOR, 0.022 μ F	1		1	Y
C86	PQCUV1E104MD	ECUV1C104KBV	CAPACITOR, 1 μ F	1		1	Y

C87	ECEA1VU330	ECEA1VU330	CAPACITOR, 33 μ F	1	*1		
C88	ECEA1HN2R2S	ECEA1HN2R2S	CAPACITOR, 2.2 μ F	1	*1		
C89	PQCUV1E104MD	ECUV1C104KBV	CAPACITOR, 0.1 μ F	1		1	Y
C90	ECEA1VU330	ECEA1VU330	CAPACITOR, 33 μ F	1	*1		
C91	ECEA1HN2R2S	ECEA1HN2R2S	CAPACITOR, 2.2 μ F	1	*1		
C92	PQCUV1H101JC	ECUV1H101JCV	CAPACITOR, 100pF	1		1	Y
C93	PQCUV1H101JC	ECUV1H101JCV	CAPACITOR, 100pF	1		1	Y
C94	PQCUV1H470JC	ECUV1H470JCV	CAPACITOR, 47pF	1		1	Y
C95	PQCUV1H470JC	ECUV1H470JCV	CAPACITOR, 47pF	1		1	Y
C96	PQCUV1H470JC	ECUV1H470JCV	CAPACITOR, 47pF	1		1	Y
C97	PQCUV1H223KB	ECUV1H223KB	CAPACITOR, 0.022 μ F	1		1	Y
C98	PQCUV1H223KB	ECUV1H223KB	CAPACITOR, 0.022 μ F	1		1	Y
C99	PQCUV1H223KB	ECUV1H223KB	CAPACITOR, 0.022 μ F	1		1	Y
C100, C101	PQCUV1H220JC	ECUV1H220JCV	CAPACITOR, 22pF	2		1	Y
C102	PQCUV1H223KB	ECUV1H223KB	CAPACITOR, 0.022 μ F	1		1	Y
C601	ECEA1EU4R7	ECEA1EU4R7	CAPACITOR, 4.7 μ F	1	*1		
C602	ECEA1EU4R7	ECEA1EU4R7	CAPACITOR, 4.7 μ F	1	*1		
C603	----------	ECUV1H223KB	CAPACITOR, 0.022 μ F	1		5	
C604	PQCUV1H104ZF	ECUV1C104KBV	CAPACITOR, 0.1 μ F	1		1	Y
C660	ECCD1H680JC	----------	CAPACITOR, 68pF	0		7	
C705	----------	ECUV1H223KB	CAPACITOR, 0.022 μ F	1		1	
T1	ETA14Y180AY	ETA14Y180AY	TRANSFORMER	1	*1		
T2~T5	PQLT2D6A	PQLT2D6A	TRANSFORMER	4	*1		
L7~L14	PQLE106	PQLE106	COIL	8	*1		
L21~L23	PQVFTU50MT	PQVFTU50MT	CERAMIC FILTER	3	*1		
L24~L27	PQVFCM04RC01	PQVFCM04RC01	CERAMIC FILTER	4	*1		
L30	PQLE106	PQLE106	COIL	1	*1		
JAC1, JAC2	PQJJ1G1Z	PQJJ1G1Z	JACK, PAGING	2	*1		
JAC3, JAC4	PQJJ1D3Z	PQJJ1D3Z	JACK, EP, EXT. HOLD	2	*1		
CN1	PQJS64R15Z	PQJS64R15Z	CONNECTOR, 64P	1	*1		
CN4	PQJP2D70Z	PQJP2D70Z	CONNECTOR, 2P	1	*1		
CN5~CN8	PSJS20A25Z	PSJS20A25Z	CONNECTOR, 20P	4	*1		
CN9	PQJP20A08Z	PQJP20A08Z	CONNECTOR, 20P	1	*1		
CN12	PQJP6D70Z	PQJP6D70Z	CONNECTOR, 6P	1	*1		
CN13	PQJS6H30Z	PQJS6H30Z	CONNECTOR, 6P	1	*1		
CN14	PQJS4H30Z	PQJS4H30Z	CONNECTOR, 4P	1	*1		
BAT	CR23541GUF	CR23541GUF	LITHIUM BATTERY	1	*1		
SW1	EVQ21409K	EVQ21409K	SWITCH	1	*1		
SW2	PQSS2A24Z	PQSS2A24Z	SWITCH	1	*1		
SW3	ESD11V120	ESD11V120	SWITCH	1	*1		
X1	PQVCJ12000NB	PQVCJ12000N8	CRYSTAL OSCILLATOR	1		7	
X2	PQVCL3276N6Z	PQVCL3276N6Z	CRYSTAL OSCILLATOR	1	*1		

X3	PQVCJ8192N8Z	PQVCJ8192N8Z	CRYSTAL OSCILLATOR	1	*1		
Z1, Z2, Z4~6	PQRSLD8X103J	PQRSLD8X103J	RESISTOR ARRAY	5	*1		
POWER SUPPLY UNIT PARTS							
91	PQMC10053Y	PSMC1084Z	SHIELD COVER ⚠	1	*2	8	Y
92	PQMC10052X	PSMC1085Z	SHIELD CASE ⚠	1	*2	8	Y
94	PQQT4181Z	----------	CAUTION LABEL	0		6	
95	PQHR10179Z	PSHE1095Z	SPACER-B	1	*2	8	Y
96	PQJS02R46Y	----------	CONNECTOR, 2P ⚠	0		6	
98	PQJP3A3Z	----------	SOCKET, AC ⚠	0		6	
99	EST15702V	----------	SWITCH, POWER ⚠	0		6	
100	PQMH10027Z	PSMH1183Z	ANGLE, POWER SW ⚠	1	*2	8	Y
101	PQJV3Z	----------	HOLDER, FUSE ⚠	0		6	
103	PQQT10469Y	PSQT1747Z	FUSE LABEL ⚠	1	*2	8	Y
PCB7	PSWP7TD1232E	PSWP7T1232E1	POWER SUPPLY BOARD ASS'Y RTL ⚠	1		8	Y

1.4. NEW POWER SUPPLY UNIT PARTS

Note:

1. **RTL (Retention Time Limited)**
   The marking (RTL) indicates that the Retention Time is limited for this item.
   After the discontinuation of this assembly in production, the item will continue to be available for a specific period of time. The retention period of availability is dependent on the type of assembly, and in accordance with the laws governing part and product retention.
   After the end of this period, the assembly will no longer be available.
2. **Important safety notice**
   Components identified by the ⚠ mark special characteristics important for safety. When replacing any of these components, use only manufacture's specified parts.
3. **The S mark indicates service standard parts and may differ from production parts.**
4. **RESISTORS & CAPACITORS**
   Unless otherwise specified;
   All resistors are in ohms (Ω) K=1000 Ω , M=1000k Ω

All capacitors are in MICRO FARADS (μ F) P= μ μ F
*Type & Wattage of Resistor

Type

ERC:Solid ERD:Carbon PQRD:Carbon	ERX:Metal Film ERG:Metal Oxide ER0:Metal Film	PQ4R:Carbon ERS:Fusible Resistor ERF:Cement Resistor

Wattege

10,16:1/8W	14,25:1/4W	12:1/2W	1:1W	2:2W	3:3W

*Type & Voltage of Capacitor

Type

ECFD:Semi-Conductor ECQS:Styrol PQCUV:Chip ECQMS:Mica	ECCD,ECKD,ECBT,PQCBC:Ceramic ECQE,ECQV,ECQG:Polyester ECEA,ECSZ:Electlytic ECQP:Polypropylene

Voltage

ECQ Type	ECQG ECQV Type	ECSZ Type	Others	
1H:50V 2A:100V 2E:250V 2H:500V	05:50V 1:100V 2:200V	0F:3.15V 1A:10V 1V:35V 0J:6.3V	0J :6.3V 1A :10V 1C :16V 1E,25:25V	1V :35V 50,1H:50V 1J :63V 2A :100V

Ref. No.	Part No.	Part Name & Description	Remarks
91	PSMC1084Z	SHIELD COVER	⚠
92	PSMC1085Z	SHIELD CASE	⚠
93	PQHR477Z	SPACER-A	⚠
94	PSHE1095Z	SPACER-B	
95	PSHE1095Z	SPACER-B	
97	PQJP04R07X	CONNECTOR, 4P	
100	PSMH1183Z	ANGLE, POWER SW	⚠
102	XBA2C25TB0L	FUSE	⚠
103	PSQT1747Z	FUSE LABEL	⚠
104	PSWE1012Z	INLET ASS'Y	⚠
PCB7	PSWP7D1232E1	POWER SUPPLY BOARD ASS'Y RTL	⚠
IC1	PSVIKA1M0880	IC	
IC2	PSVIKA3843B	IC	
IC4	PSVIKA431Z	IC	
IC5	PSVIKA431Z	IC	
IC9	PQVILA6500	IC	
		(TRANSISTOR)	
Q2	KSP2222A	TRANSISTOR	
Q3	KSP2222A	TRANSISTOR	
Q4	KSP2907A	TRANSISTOR	
Q5	PSVTIRFZ44	TRANSISTOR	
Q6	KSA1220A0	TRANSISTOR	
Q7	KSP2222A	TRANSISTOR	
Q8	KSP2222A	TRANSISTOR	
Q9	KSP2907A	TRANSISTOR	
Q10	KSP2222A	TRANSISTOR	
Q13	KSP2222A	TRANSISTOR	
Q14	KSP2907A	TRANSISTOR	
Q15	KSP2222A	TRANSISTOR	
		(DIODES)	
D1	PSVDUF4007	DIODE	
D2	PSVDBYW32	DIODE	

Ref. No.	Part No.	Part Name & Description	Remarks
D3	PSVDIN4004GP	DIODE	
D4	PSVDIN4004GP	DIODE	
D5	PSVDP6KE350A	DIODE	
D8	PSVDS20LC20U	DIODE	
D10	PSVDSF10SC4	DIODE	
D11	PSVDBYV27200	DIODE	
D12	PSVDS20LC20U	DIODE	
D13	PSVDBYV27200	DIODE	
D14	PSVD1N4148	DIODE	
D15	PSVD1N4148	DIODE	
D16	PSVD1N4148	DIODE	
D19	PSVDBYV38	DIODE	
ZD1	PQVDMZJ6R2B	DIODE	
ZD2	PQVDMZJ36B	DIODE	
ZD3	PQVDMZJ5R1B	DIODE	
DB1	PSVDD5SBA60	DIODE	
		(RESISTOR)	
R1	ERDS2TJ474	47k	
R2	ERDS1TJ204	200k	
R3	ERDS1TJ204	200k	
R4	ERG3SJ104	100k	
R5	ERG1SJ473	47k	
R6	ERDS2TJ472	4.7k	
R8	ERDS2TJ102	1k	
R9	ERDS2TJ242	2.4k	
R10	ERDS2TJ242	2.4k	
R11	ER016CKF1202	12k	
R12	ERDS2TJ513	51k	
R13	ERDS1TJ101	100	
R14	PSRMPR5R50MJ	0.05	
R15	ERDS2TJ202	2k	
R16	ERDS2TJ513	51k	
R17	ERDS2TJ472	4.7k	
R18	ERDS2TJ362	3.6k	
R19	ERDS2TJ390	39	
R20	ERG3SJ361	360	
R21	ER016CKF4701	4.7k	
R23	ERDS2TJ330	33	
R24	ERDS2TJ101	100	
R30	ERG1SJ100	10	
R31	ERDS2TJ472	4.7k	
R32	ERDS2TJ243	24k	
R33	ERDS2TJ432	4.3k	
R34	ERDS2TJ101	100	
R35	ERG1SJ100	10	
R36	PSRRQR5W270J	270	
R37	ERG1SJ100	10	
R38	ERG1SJ201	200	
R39	ERG1SJ100	10	
R40	ERDS2TJ511	510	
R41	ERDS1TJ241	240	
R43	ERDS2TJ243	24k	
R44	PSRMPR5R80MJ	0.08	

Ref. No.	Part No.	Part Name & Description	Remarks
R51	ERDS2TJ474	470k	
R57	ERDS2TJ123	12k	
R62	ERDS2TJ472	4.7k	
R63	ERDS2TJ562	5.6k	
R64	ERDS2TJ202	2k	
R65	ERDS2TJ561	560	
R66	ERDS2TJ2R2	2.2	
R67	ERDS1TJ101	100	
R68	ERDS2TJ472	4.7k	
R69	ERG3SJ104	100k	
R70	PSRMPR5R50MJ	0.05	
R71	ERDS2TJ472	4.7k	
R72	ERDS2TJ203	20k	
R73	ERDS2TJ472	4.7k	
R74	ERDS2TJ513	51k	
R75	ERDS2TJ472	4.7k	
R88	ERDS2TJ472	4.7k	
R89	ERDS2TJ472	4.7k	
		(CAPACITORS)	
C1	PSCCEMU2D471	470 μ F	
C2	PSC223K630	0.022 μ F	
C3	PSSCEMU2D471	470 μ F	
C4	PSCCEST1H220	22 μ F	
C5	PSCCEST1H220	22 μ F	
C8	PSCKR215C683	0.068 μ F	
C9	PSC154K400	0.15 μ F	
C10	PSCCELT1H010	1 μ F	
C14	PSCS215C104J	0.1 μ F	
C15	PSCS215C222J	2200pF	
C16	PSCCELT1H010	1 μ F	
C17	PSCS215C102J	1000pF	
C18	PSCCELT1H010	1 μ F	
C19	PSCCEMZ1E152	1500 μ F	
C20	PSCCEMZ1E152	1500 μ F	
C23	PSCS215C103J	0.01 μ F	
C25	PSCCEMZ1E221	220 μ F	
C27	PSCCEMZ1A152	1500 μ F	
C28	PSCYB2H222K	2200pF	
C29	PSCYB2H222K	2200pF	
C30	PSCCELT1H100	10 μ F	
C31	PSCCEMZ1E221	220 μ F	
C32	PSCCELT1H010	1 μ F	
C33	PSCS215C104J	0.1 μ F	
C34	PSCS215C104J	0.1 μ F	
C35	PSCYB2H222K	2200pF	

Ref. No.	Part No.	Part Name & Description	Remarks
C36	PSCYB2H222K	2200pF	
C37	PSCCEMZ1E152	1500 μ F	
C38	PSCCEMZ1E152	1500 μ F	
C39	PSCCEMZ1E221	220 μ F	
C40	PSCS215C104J	0.1 μ F	
C49	PSCS215C104J	0.1 μ F	
C50	PSCCEMZ1C221	220 μ F	
C52	PSCCELT2W010	1 μ F	
C60	PSCCELT1H100	10 μ F	
C101	PSCP2335M104	0.1 μ F	
C102	PSCP2335M224	0.22 μ F	
C103	PSCHCYE2G222	2200pF	
C104	PSCHCYE2G222	2200pF	
C105	PSCHCYE2G332	3300pF	
C106	PSCHCYE2G332	3300pF	
		(VARISTORS)	
ZNR1	PSVDNR10D471	VARISTOR	
ZNR3	PSVDV151RA07	VARISTOR	
ZNR4	PSVDV151RA07	VARISTOR	
		(VARIABLE RESISTORS)	
VR1	EVNDXAA03B52	SEMI-FIXED RESISTOR 500 Ω (B)	
VR2	EVNDXAA03B52	SEMI-FIXED RESISTOR 500 Ω (B)	
		(CONNECTORS)	
CN400	PQJP2D98Z	CONNECTOR. 2P	
CN401	PSJS07Q91Z	CONNECTOR. 7P	
CN402	PQJP4D30Z	CONNECTOR. 4P	
CN403	PQJP4D46Z	CONNECTOR. 4P	
LG1	PSJT1035Z	CONNECTOR-LUG	
LG2	PSJT1035Z	CONNECTOR-LUG	
		(THYRISTOR)	
SCR1	PSVDTYN058	THYRISTOR	
		(COILS)	
L1	PSLECCM011	COIL	
L2	PSLECC022	COIL	
L3	PSLECCM001	COIL	
L4	PSLECCM011	COIL	
L5	PSLEMGM001	COIL	
L6	PSLECCM002	COIL	
L7	PSLECCM011	COIL	
L8	PSLE04TB101K	COIL	
L10	PSLECCM011	COIL	
L11	PSLESA07230Q	COIL	
L12	PSLECA112019	COIL	
L13	PSLECA112019	COIL	
L14	PSLE04TB510M	COIL	

Ref. No.	Part No.	Part Name & Description	Remarks
		(TRANSFORMER)	
T1	PSLTTSM001	TRANSFORMER	⚠
		(PHOTO ERECTRIC TRANSDUCERS)	
PC1	PSVIKPC817	PHOTO COUPLER	⚠
PC2	PSVIKPC817	PHOTO COUPLER	⚠
		(THERMISTORS)	
TH1	PSRT5R114	THERMISTOR	⚠
		(FUSE)	
F2	PSBATEST396	FUSE	⚠
		(CORES)	
B1	PSXCELBC4865	CORE	
B2	PSXCELBC4865	CORE	
B3	PSXCELBC3533	CORE	
B4	PSXCELBC3533	CORE	

Change from original Service Manual page 11. (KX-TD1232C:Order No.KM49307582C1)

Ref. No. 7	**HOW TO REMOVE THE POWER SUPPLY BOARD**
Procedure 1→2→6→7	1. Remove the eight screws (A). 2. Remove the shield cover. 3. Remove the two screws (B). 4. Remove the four screws (C). 5. Remove the Power Supply Board.

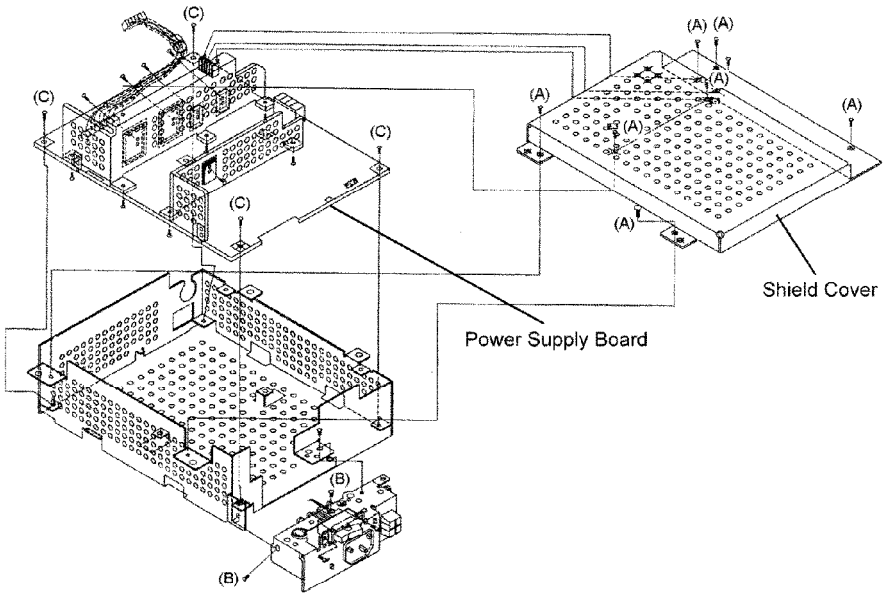

1.5. Chang from original Service Manual page 31.

3 EXPLANATION OF CIRCUIT OPERATION

3-1. BASIC

1) POWER SUPPLY UNIT /

POWER SUPPLY UNIT consists of the following. / Line Filter Section / Rectifier and Smoothing Section / Switching Section / Control Section / +15 V Circuit / - 15 V Circuit / +5.3 V Circuit / Bell Amp Circuit / / POWER UNIT

Line Filter Section

Common mode noise is removed by C103, C104 and C105 to C106 and normal mode noise by L11, L12 and L13. Lightening surges are absorbed by ZNR1. /

Rectifier and Smoothing Section

The input signal is full-wave rectified by bridge diode DB1 and smoothed by C1, C3 resulting in a DC current. TH1 is power thermister. /

Switching Section

The switching section is a basic Forward Converter uses the IC1 included power MOS.FET. D1, R4 and C2 are for resetting the excitation energy stored in T1 while T1 is OFF. /

Control Section

IC1 is a Forward Converter type switching module adopted power MOS.FET. The block diagram of IC1 has the following roles. / C9, D3, R5 : FOR starting / C10 : FOR soft start delay / C8 : FOR feed back compensating / PC1 : FOR feed back / R57, Q14, C34 : For over voltage protector circuit. / R89, PC2, D14 / R88, C33, Q13 / Q15 / / / / /

BLOCK DIAGRAM

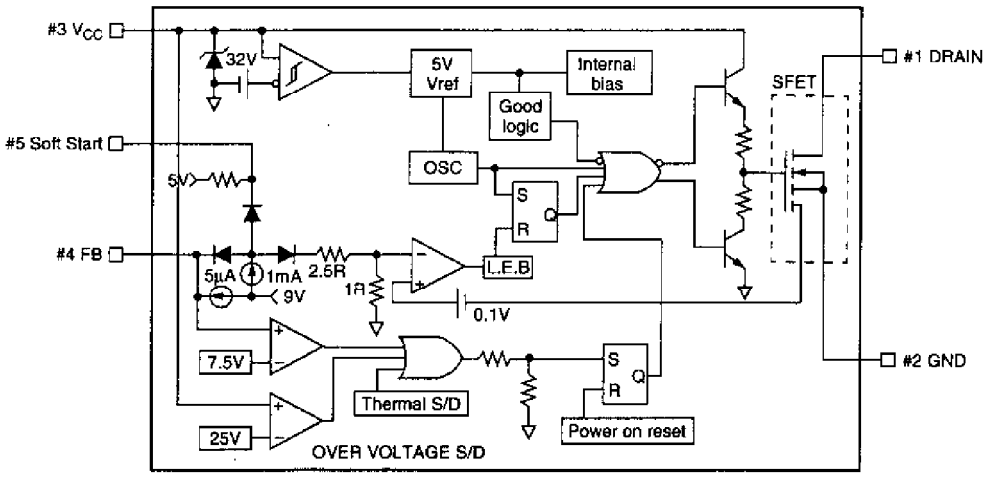

+15V Circuit

The circuit connected pin (8-9)-(10-11) of switching transformer T1 generates +15V. With feed back on the primary side from +15V line, +15V is stabilized by the PWM controller of the primary side. The following is the roles of main surrounding circuit. / D8, L3, C19, C20 : Rectifier and smoothing circuit / L4, C31 : Filter / IC4, C32, R31 : Free back circuit / PC1, R32, R33, / VR2 / R34, Q8, R72 : Over current detection circuit / R71, C40, Q9, / R70 /

-15V Circuit

-15V is generated from the circuit connected to pin (12, 13)-14 of switching transformer. -15V cannot be stabilized by PWM controller of the primary side since feed back is not done on the primary side from -15V line. So, the bleeder circuit stabilizes -15V. / The following is the roles of main surrounding circuit. / D12, L6, C37, C38 : Rectifier and smoothing circuit / L7, C39 : Filter / IC5, R21, C18 : -15V stabilizing circuit / R41, R43, R22, / R40, Q6, D11, / R38, D13 / R24, Q7, C17 : Over current detection circuit / R44 /

+5.3V Circuit

+5.3V is generated by PMW controller, IC2 connected to the +15V output. It has an over voltage protection circuit to prevent abnormal output voltage. / The following is the roles surrounding circuit. / L1, C25 : Filter / L8, C30 : Filter / L2, C27 : Filter / L10, C50 : Filter / SCR1, F2 : Over voltage chopper circuit / ZD1, R19, C14 : Over voltage detection circuit / R8 / R17, R18, VR1 : Feed back circuit / C15, R11 : For selecting oscillator frequency and duty cycles / Q2, R9, R10 : For duty cycle control / R14, Q4, R15 : Over Current detection circuit / C16, R16, Q3 /

Bell Amp Circuit

It increases bell signals sent from CPU board in Power Op. Amp, IC9 and sends them into the bell amp. Then, they are sent to the extension boards.

CIRCUIT DIAGRAM

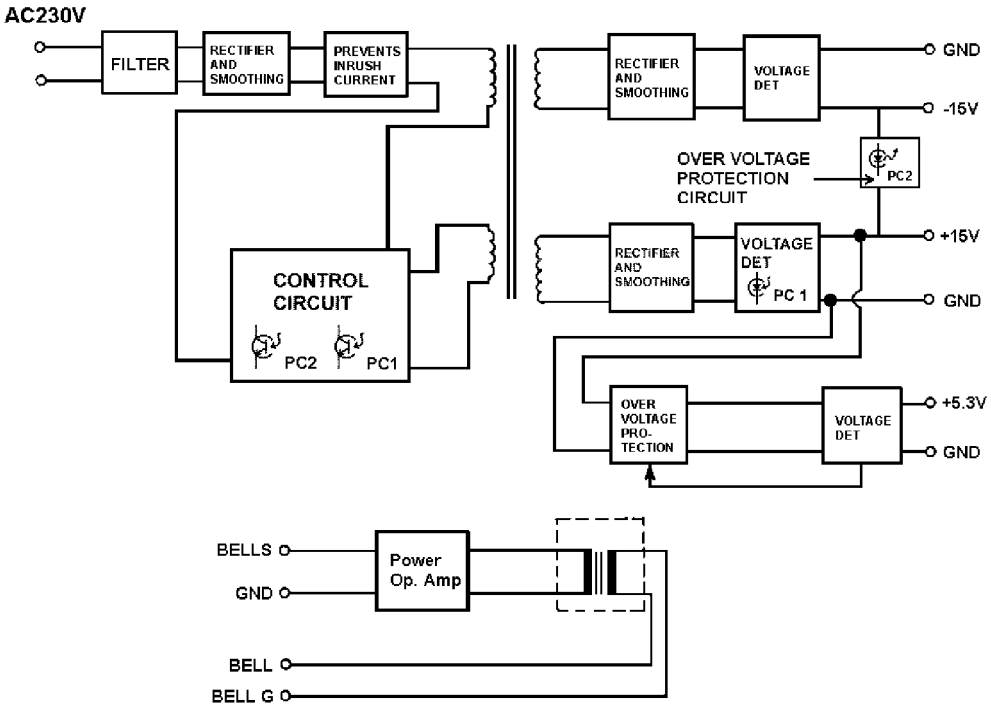

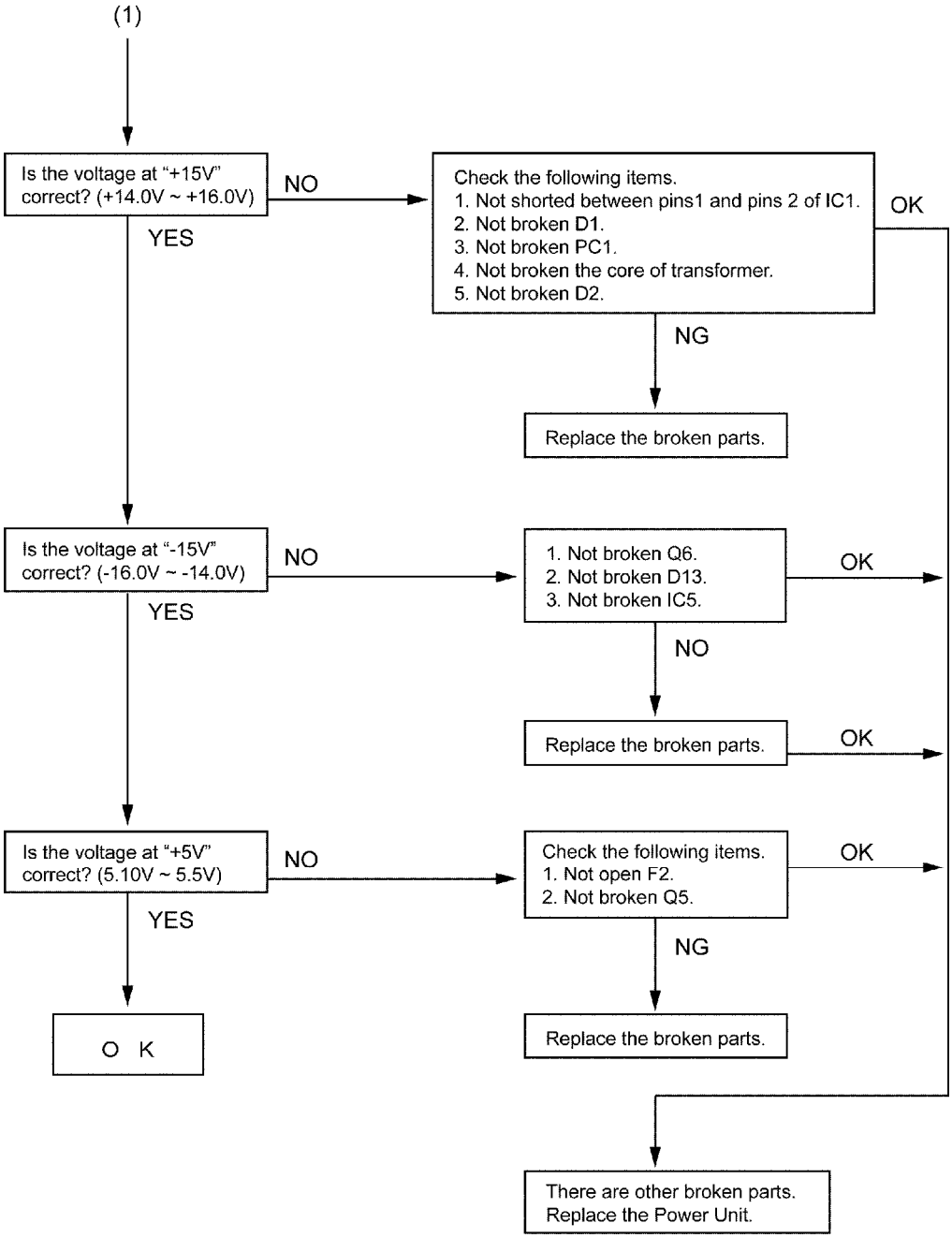

1.6. TERMINAL GUIDE OF IC'S, TRANSISTORS AND DIODES

1.6.1. Addition from original page 107

Pin description of IC's

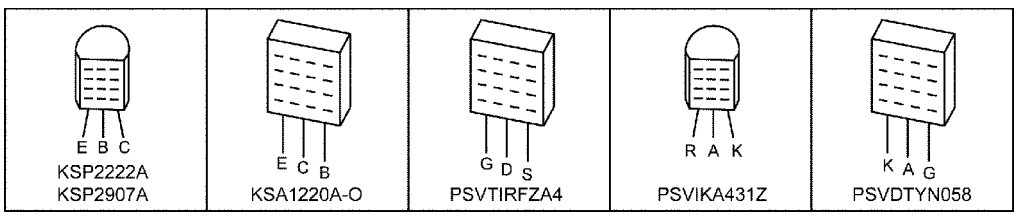

2. PRINTED CIRCUIT BOARD (CPU BOARD)

2.1. Change from Supplement-2 page 3.

Bottom View

2.2. Change from Supplement-2 page 4.

Component View

3. SCHEMATIC DIAGRAM (CPU CIRCUIT)

3.1. Change from Original Service Manual pages 73~75.

4. PRINTED CIRCUIT BOARD & SCHEMATIC DIAGRAM (POWER SUPPLY BOARD)

4.1. Change from original pages 105-106 (KX-TD1232C:Order No. KM49307582C1)

5. SCHEMATIC DIAGRAM (POWER SUPPLY CIRCUIT)

5.1. Change from original pages 103-104 (KX-TD1232C:Order No. KM49307582C1)

6. CABINET AND ELECTRICAL PARTS LOCATION

6.1. POWER SUPPLY SECTION.....Change from original Service Manual page 111. (KX-TD1232C:Order No. KM49307582C1)

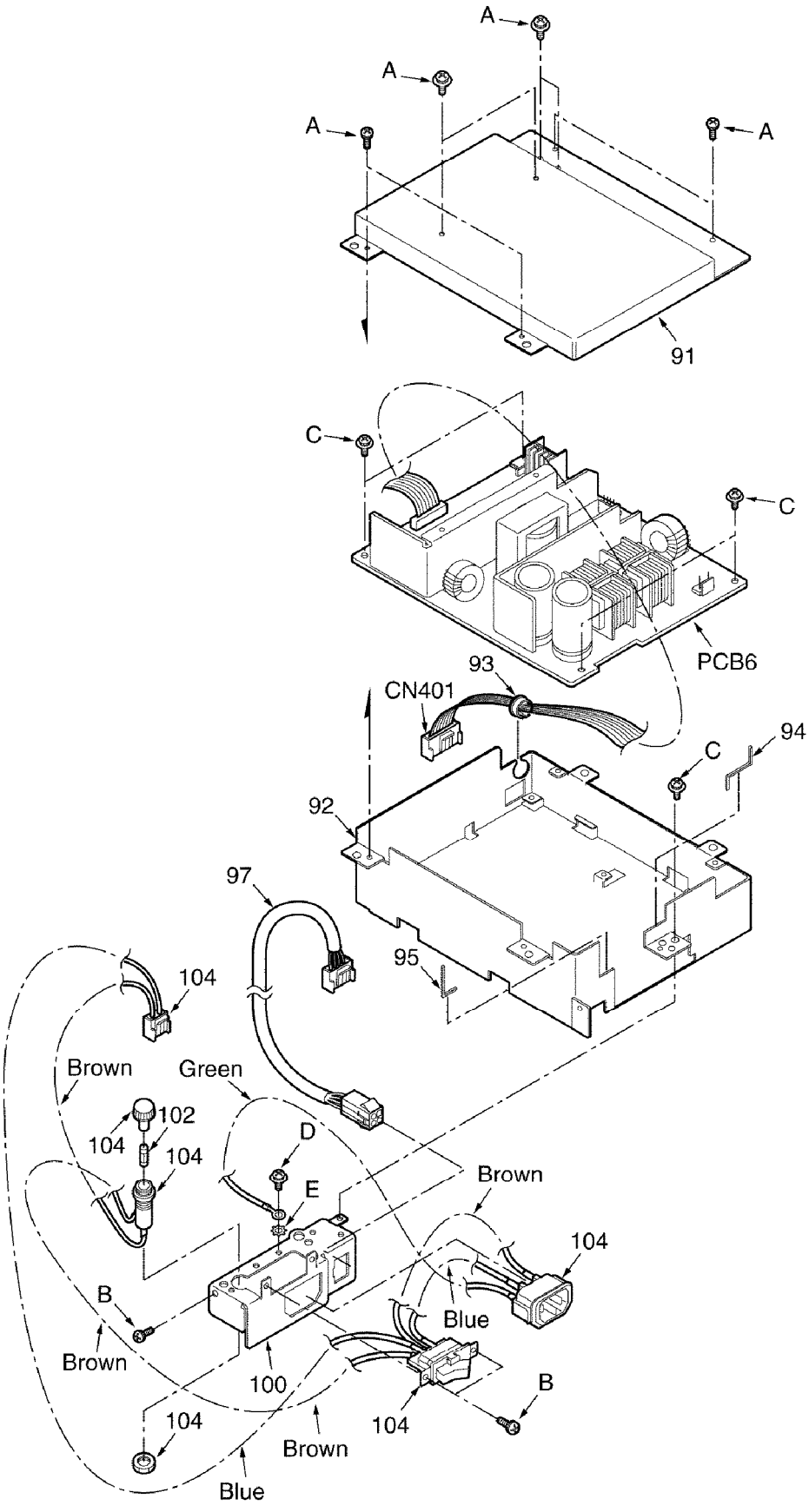
A
A
A
A
91
C
C
PCB6
93
CN401
94
C
92
97
95
104
Brown
Green
102
104
104
D
E
Brown
104
B
Brown
100
Blue
104
B
104
Brown
Blue

7. ACCESSORIES AND PACKING MATERIALS

Fig. 1

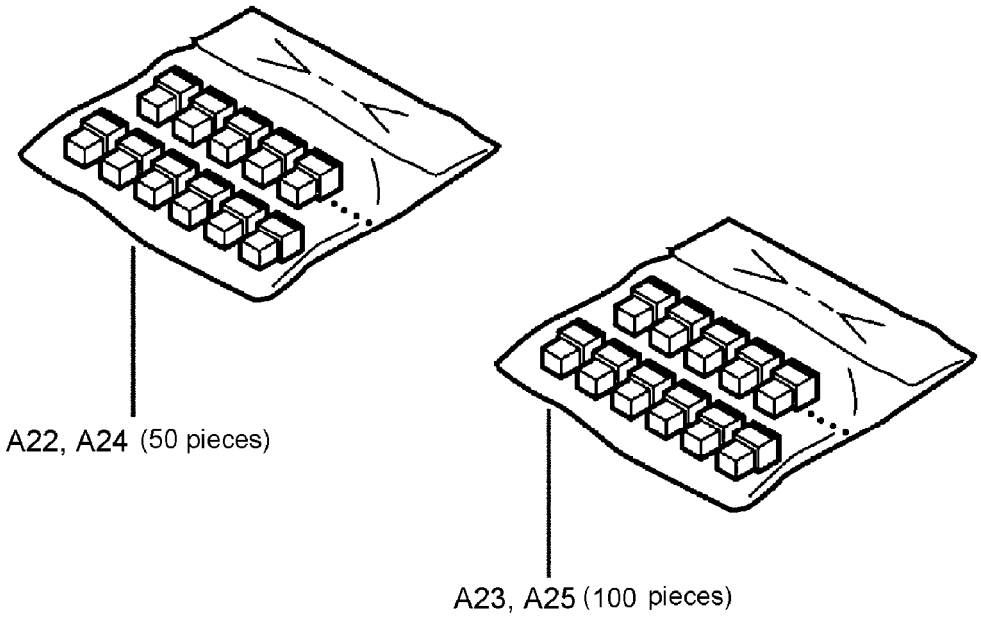

N.T. / KXTD1232E

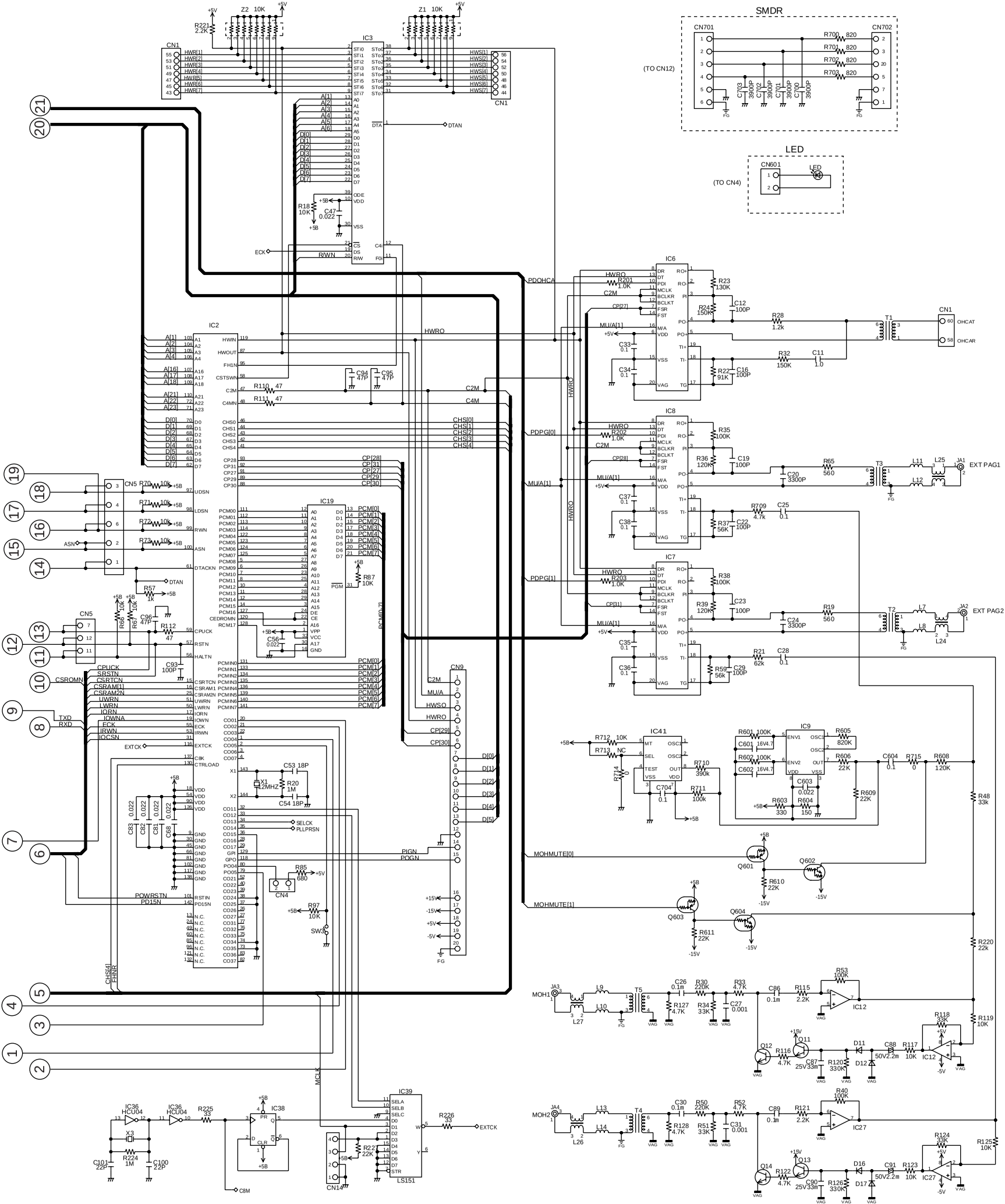
SMDR
CN701
CN702
(TO CN12)
R700 820
R701 820
R702 820
R703 820
C703 3900P
C702 3900P
C701 3900P
C700 3900P
FG
LED
CN601
LED
(TO CN4)
IC3
CN1
Z2 10K
Z1 10K
R221 2.2K
+5V
HWR[1]
HWR[2]
HWR[3]
HWR[4]
HWR[5]
HWR[6]
HWR[7]
HWS[1]
HWS[2]
HWS[3]
HWS[4]
HWS[5]
HWS[6]
HWS[7]
A[1]
A[2]
A[3]
A[4]
A[5]
A[6]
D[0]
D[1]
D[2]
D[3]
D[4]
D[5]
D[6]
D[7]
DTA
DTAN
R18 10K
C47 0.022
+5B
ECK
R/WN
IC2
IC6
IC8
IC7
IC19
IC41
IC9
IC12
IC27
IC36 HCU04
IC38
IC39
LS151
CN5
CN9
CN4
CN14
SW3
PDOHCA
PDPG[0]
PDPG[1]
MU/A[1]
HWRO
C2M
C4M
CHS[0]
CHS[1]
CHS[2]
CHS[3]
CHS[4]
CP[27]
CP[28]
CP[29]
CP[30]
CP[31]
PCM[0]
PCM[1]
PCM[2]
PCM[3]
PCM[4]
PCM[5]
PCM[6]
PCM[7]
PCM[0..7]
R23 130K
R24 150K
C12 100P
R28 1.2k
R32 150K
C11 1.0
R22 91K
C16 100P
R35 100K
R36 120K
C19 100P
R65 560
C20 3300P
R37 56K
C22 100P
R709 4.7K
C25 0.1
R38 100K
R39 120K
C23 100P
R19 560
C24 3300P
R21 62k
C28 0.1
R59 56K
C29 100P
T1
T2
T3
EXT PAG1
EXT PAG2
CN1
OHCAT
OHCAR
JA1
JA2
L11
L25
L12
L7
L8
L24
CPUCK
SRSTN
CSRTCN
CSRAM[1]
CSRAM2N
UWRN
LWRN
IORN
IOWNA
ECK
IRWN
IOCSN
EXTCK
CSROMN
TXD
RXD
POWRSTN
PD15N
C53 18P
X1 12MHZ
R20 1M
C54 18P
SELCK
PLLPRSN
R85 680
R97 10K
PIGN
POGN
MOHMUTE[0]
MOHMUTE[1]
Q601
Q602
Q603
Q604
R610 22K
R611 22K
R48 33k
R220 22k
R53 100K
R115 2.2K
R118 39K
R119 10K
R127 4.7K
R34 33K
C27 0.001
R30 220K
C26 0.1m
R33 4.7K
C86 0.1m
MOH1
L27
T5
Q12
Q11
R116 4.7K
D11
D12
C88 50V2.2m
R117 10K
C87 25V33m
R120 330K
R40 100K
R121 2.2K
R124 39K
R125 10K
R128 4.7K
R51 33K
C31 0.001
R50 220K
R52 4.7K
C30 0.1m
C89 0.1m
MOH2
L26
T4
Q14
Q13
R122 4.7K
D16
D17
C91 50V2.2m
R123 10K
C90 25V33m
R126 330K
R712 10K
R713 NC
R714 0
C704 0.1
R710 390K
R711 100K
C601 16V4.7
C602 16V4.7
C603 0.022
R601 100K
R602 100K
R603 330
R604 150
R605 820K
R606 22K
R609 22K
C604 0.1
R715 0
R608 120K
R712
R713
R714
R710
R711
R601
R602
R603
R604
R605
R606
R609
C601
C602
C603
C604
R715
R608
R48
R220
R53
R115
R118
R119
R127
R34
C27
R30
R33
C26
C86
R116
R117
R120
C87
C88
D11
D12
Q12
Q11
R40
R121
R124
R125
R128
R51
C31
R50
R52
C30
C89
R122
R123
C90
C91
D16
D17
Q14
Q13
R224 1M
C101 22P
C100 22P
X3
R225 33
R226 33
R227 22K
EXTCK
C8M
MCLK
CHS[4]
FHIN
R57 1K
R112 47
R110 47
R111 47
C93 100P
C96 47P
R66 10K
R67 10K
R70 10K
R71 10K
R72 10K
R73 10K
R87 10K
C56 0.022
C94 47P
C95 47P
C33 0.1
C34 0.1
C35 0.1
C36 0.1
C37 0.1
C38 0.1
C82 0.022
C81 0.022
C68 0.022
C83 0.022
+5V
+5B
-5V
-15V
FG
VAG

(Component View)

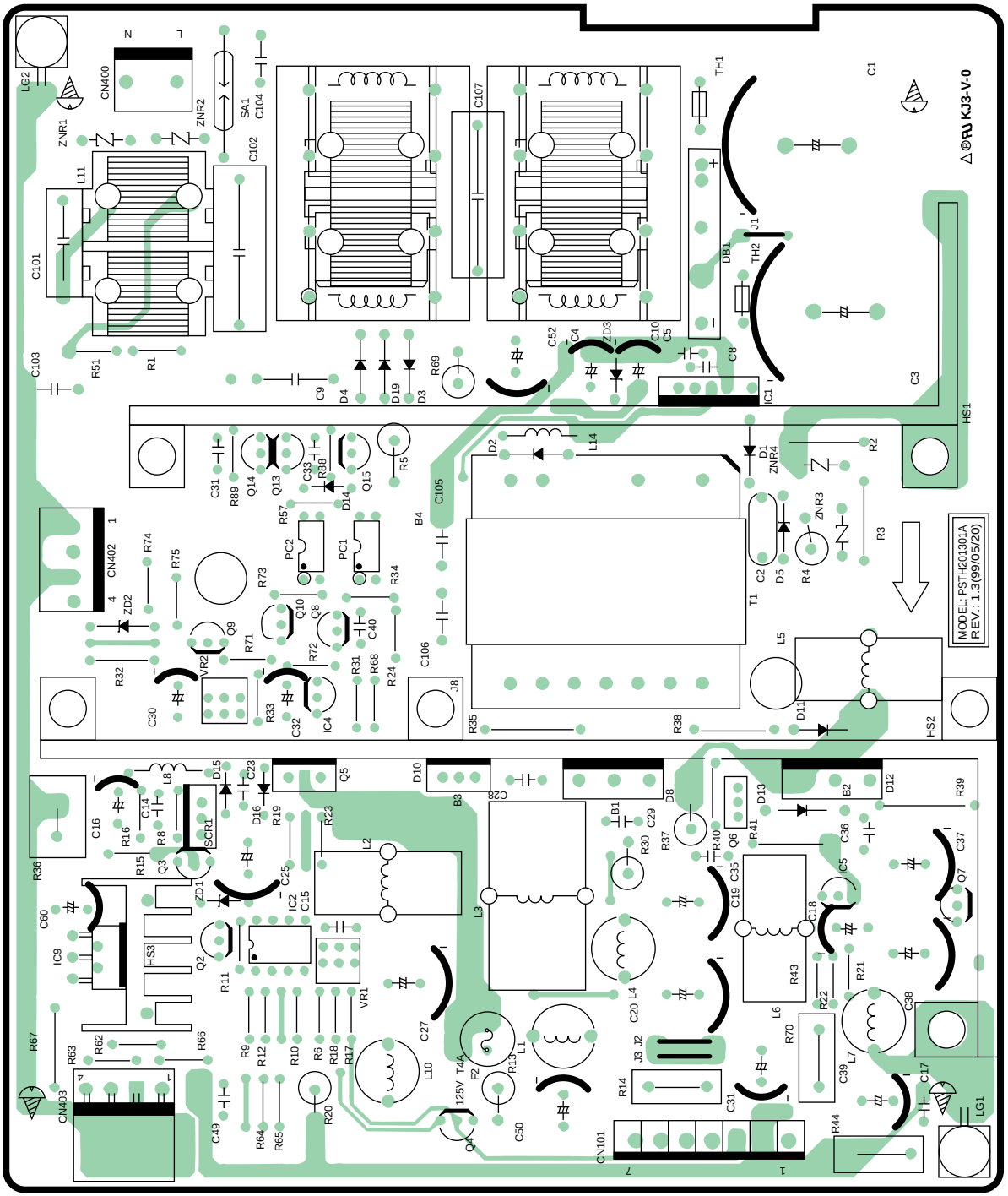

(Supplement-3)

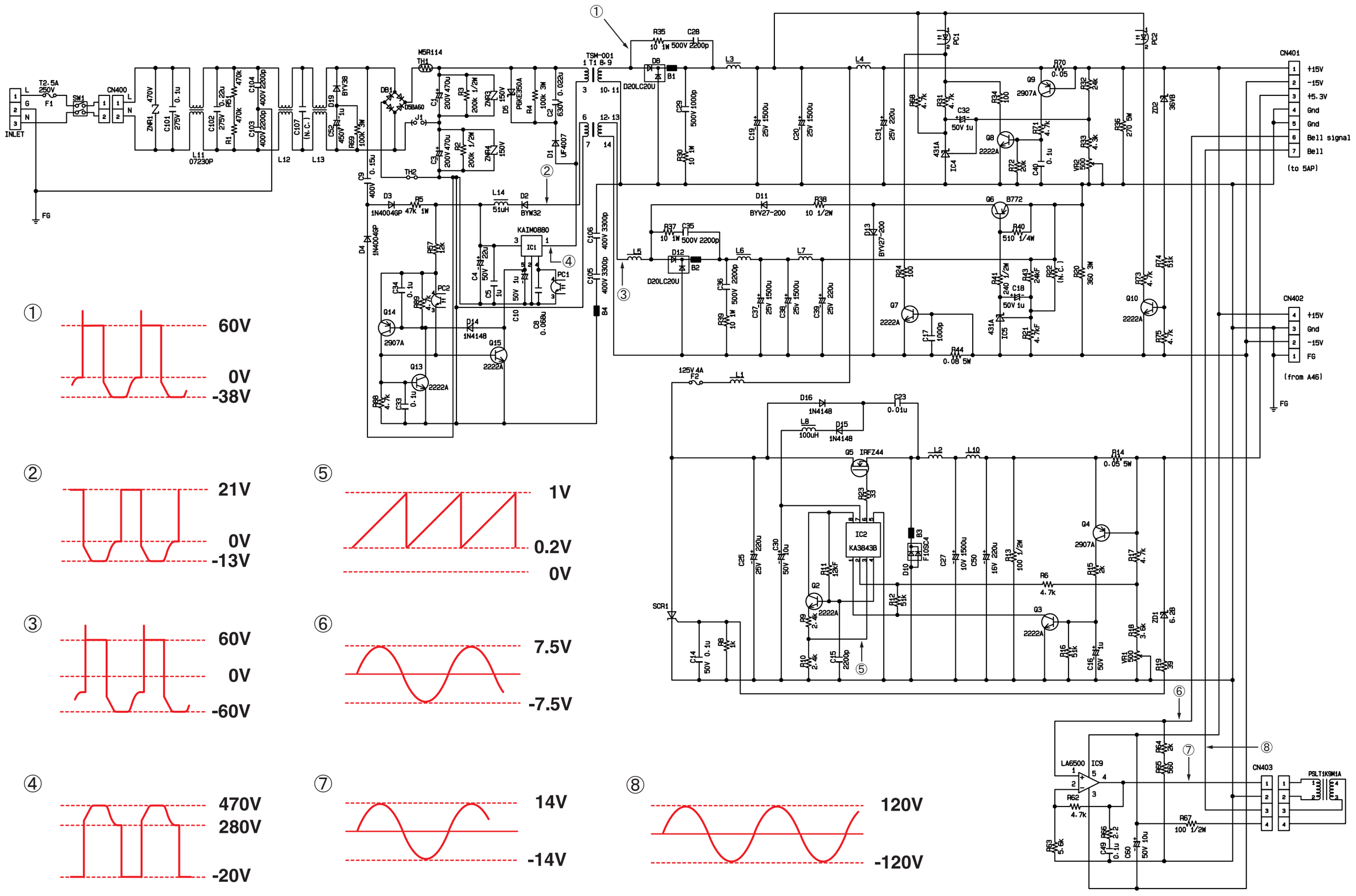

INLET
T2.5A 250V
F1
SW1
CN400
L11 07230P
L12
L13
M5R114
TH1
TH2
TSM-001
D20LC20U
KAIM0880
IC1
CN401
+15V
-15V
+5.3V
Gnd
Gnd
Bell signal
Bell
(to 5AP)
CN402
+15V
Gnd
-15V
FG
(from A46)
FG
125V 4A
F2
IC2
KA3843B
SCR1
LA6500
IC9
CN403
PSLT1K9M1A
60V
0V
-38V
21V
0V
-13V
60V
0V
-60V
470V
280V
-20V
1V
0.2V
0V
7.5V
-7.5V
14V
-14V
120V
-120V

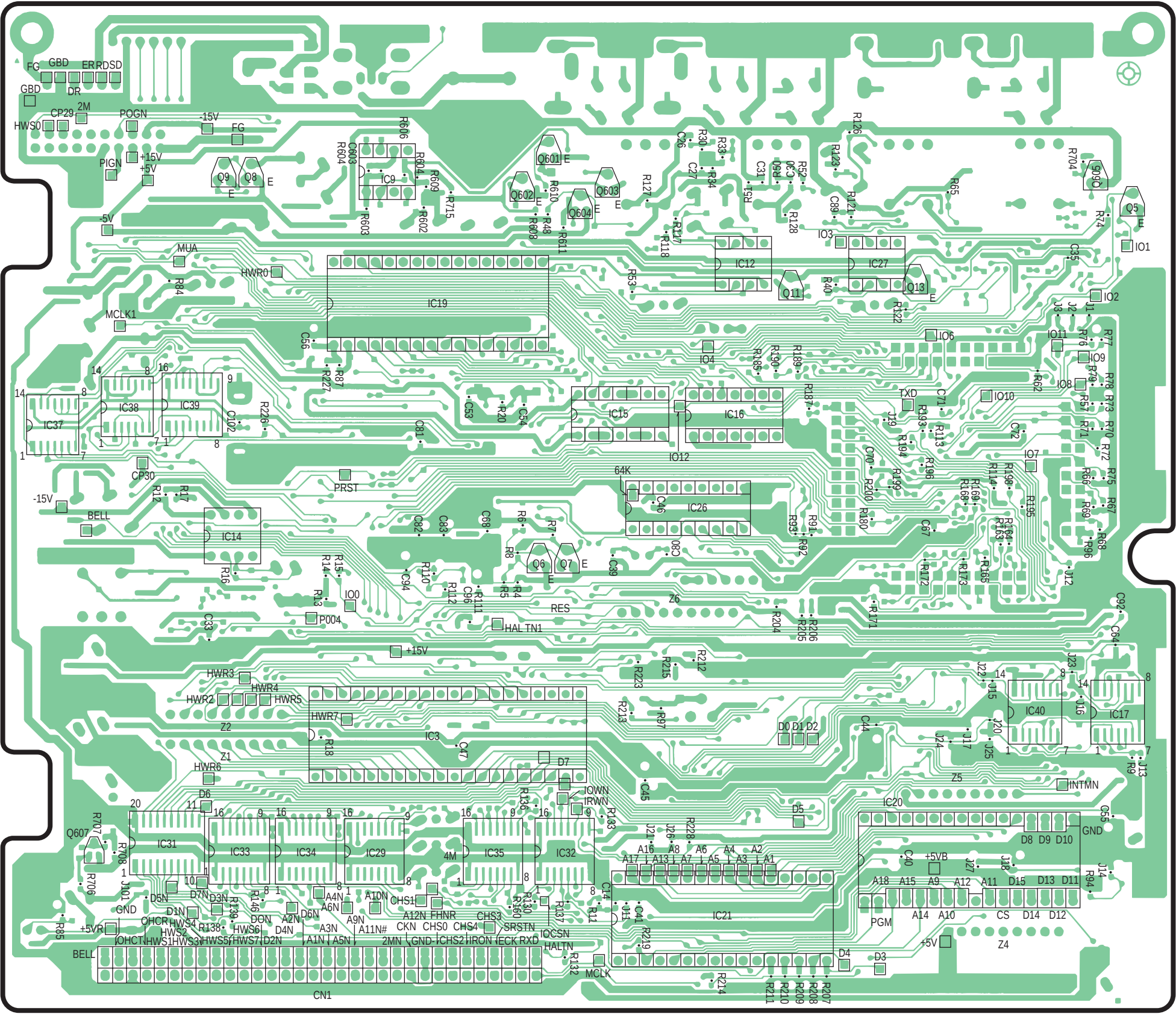

FG
GBD
ER
RD
SD
DR
CP29
2M
HWS0
POGN
-15V
PIGN
+15V
+5V
-5V
MUA
HWR0
MCLK1
IC19
IC12
IC27
IC38
IC39
IC37
IC15
IC16
IC26
IC14
IC3
IC40
IC17
IC31
IC33
IC34
IC29
IC35
IC32
IC21
IC20
IO1
IO2
IO3
IO4
IO6
IO7
IO8
IO9
IO10
IO11
IO12
TXD
PRST
BELL
64K
RES
HAL TN1
P004
IO0
HWR3
HWR4
HWR2
HWR5
HWR7
HWR6
Z1
Z2
Z5
Z6
Z4
IOWN
IRWN
INTMN
GND
+5VB
+5V
PGM
CS
CN1
MCLK
IOCSN
HALTN
SRSTN
ECK
RXD
IRON
CHS2
CHS0
CHS4
CHS3
FHNR
A12N
A11N#
A10N
A9N
A6N
A4N
A3N
A2N
A1N
A5N
D6N
D4N
D2N
D1N
D3N
D5N
D7N
D0
D1
D2
D3
D4
D5
D6
D7
D8
D9
D10
D11
D12
D13
D14
D15
A1
A2
A3
A4
A5
A6
A7
A8
A13
A16
A17
A18
A15
A9
A12
A11
A14
A10
Q601
Q602
Q603
Q604
Q5
Q6
Q7
Q8
Q9
Q11
Q13
Q607

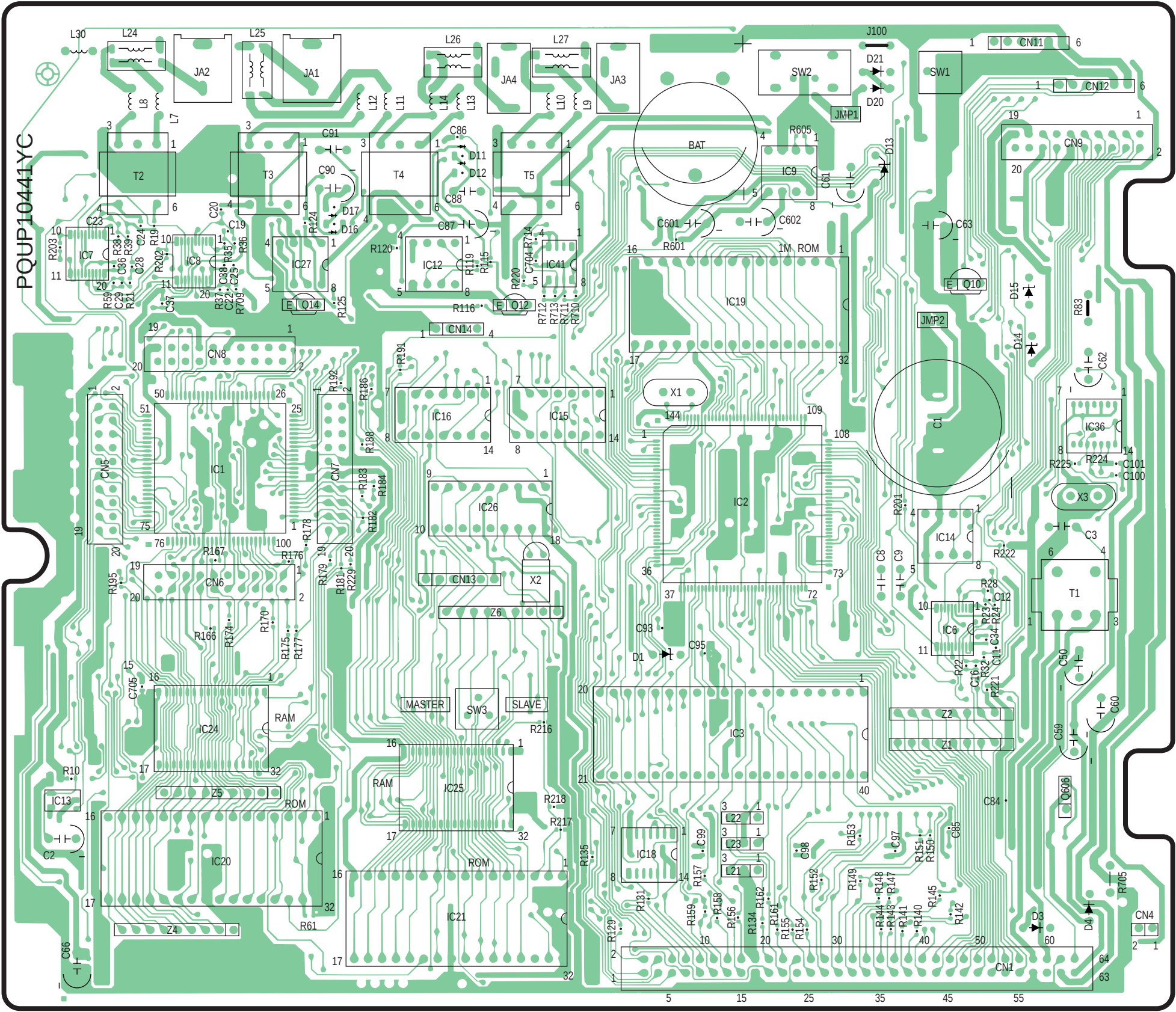
PQUP10441YC
L30
L24
L25
L26
L27
JA2
JA1
JA4
JA3
J100
SW2
SW1
CN11
CN12
D21
D20
JMP1
L8
L7
L12
L11
L14
L13
L10
L9
T2
T3
T4
T5
C91
C90
C86
D11
D12
C88
C87
D17
D16
BAT
R605
IC9
C61
D13
CN9
C23
C20
C19
R124
R120
IC7
IC8
IC27
IC12
IC41
R203
R38
R39
C24
R19
C36
C28
R202
R35
R36
C38
C25
R59
C29
R21
C37
R37
C22
R709
R125
R119
R115
R220
C704
R714
R116
Q14
Q12
R712
R713
R711
R710
C601
C602
R601
1M ROM
IC19
C63
Q10
D15
R83
JMP2
D14
C62
CN14
CN8
R191
R192
R186
IC16
IC15
X1
C1
IC36
R225
R224
C101
C100
CN5
IC1
CN7
R188
R183
R184
R182
IC26
IC2
R201
IC14
X3
C3
R222
R167
R176
R178
R179
R181
R229
CN6
R195
CN13
X2
Z6
C8
C9
R28
C12
T1
R166
R174
R170
R175
R177
C93
D1
C95
IC6
R23
R24
C34
C11
R22
C16
R32
R221
C50
C705
MASTER
SW3
SLAVE
R216
IC24
RAM
IC3
Z2
Z1
C60
C59
R10
IC13
Z5
ROM
RAM
IC25
R218
R217
C84
Q606
C2
IC20
ROM
IC21
R135
IC18
L22
L23
L21
C99
C98
R153
C97
R151
R150
C85
R157
R152
R149
R148
R147
R145
R131
R159
R158
R156
R134
R162
R161
R155
R154
R144
R143
R141
R140
R142
R705
D3
D4
CN4
Z4
R61
R129
C66
CN1

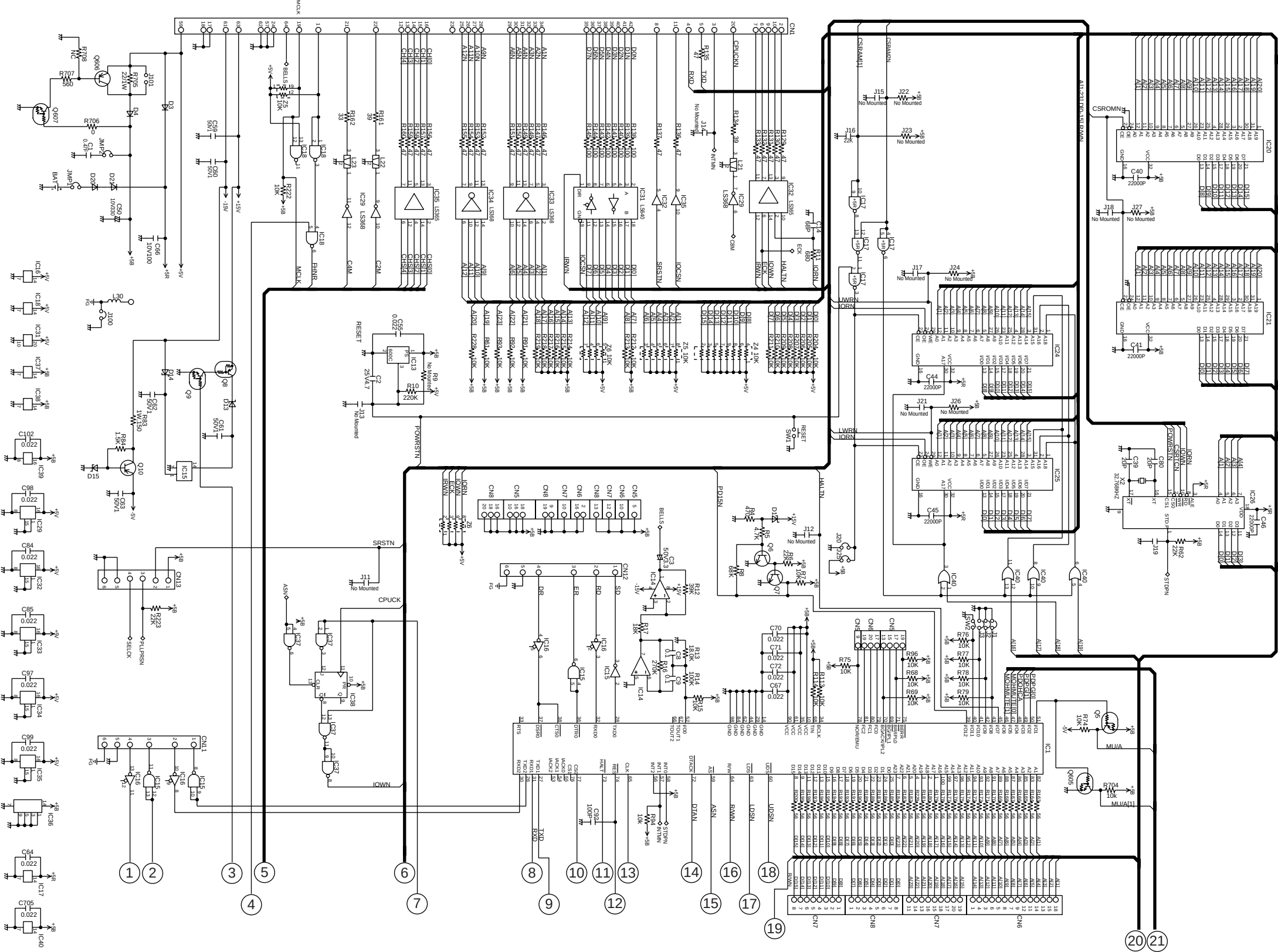

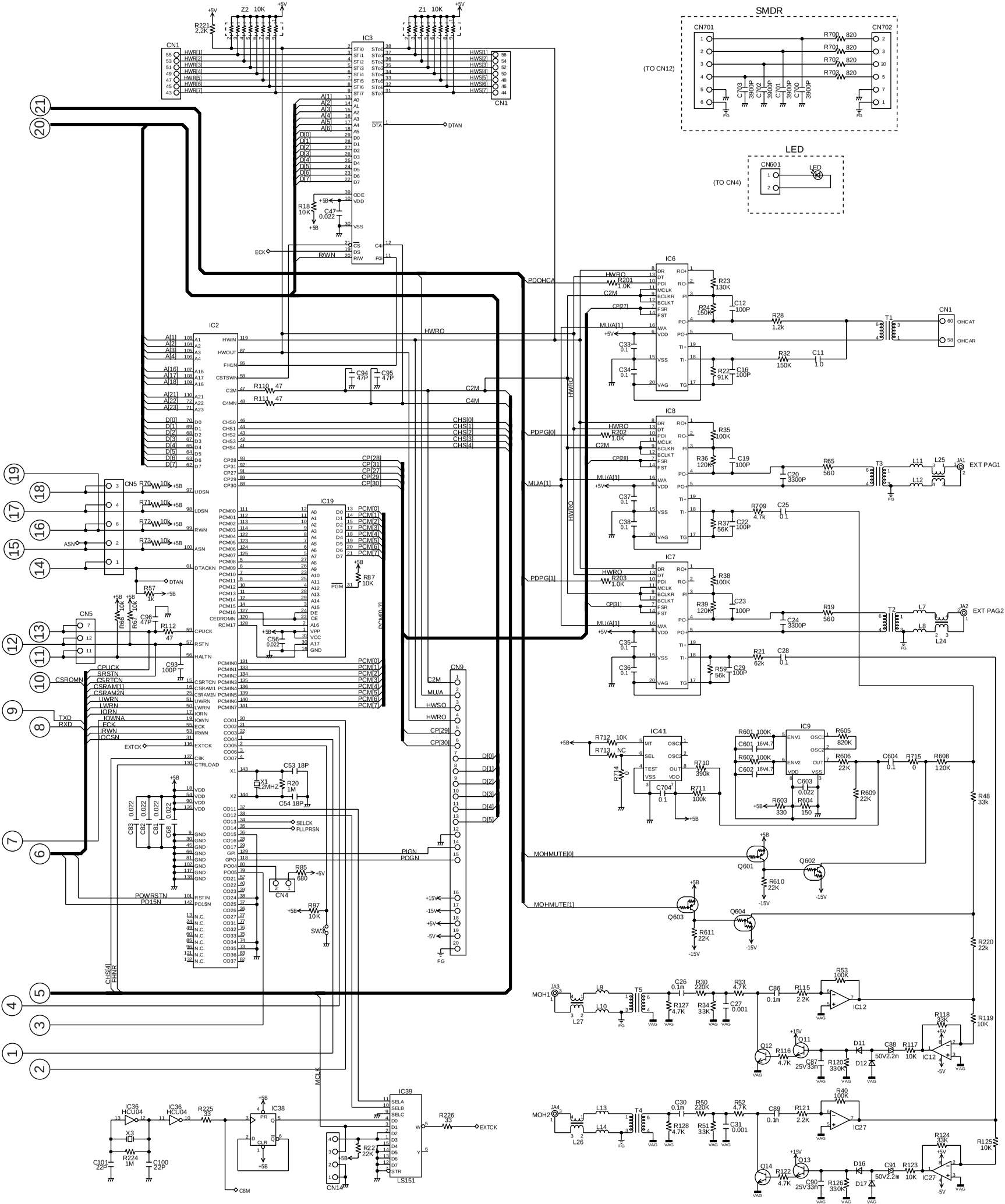
SMDR
CN701
CN702
(TO CN12)
R700 820
R701 820
R702 820
R703 820
C703 3900P
C702 3900P
C701 3900P
C700 3900P
FG
LED
CN601
LED
(TO CN4)
IC3
CN1
Z2 10K
Z1 10K
R221 2.2K
+5V
HWR[1]
HWR[2]
HWR[3]
HWR[4]
HWR[5]
HWR[6]
HWR[7]
HWS[1]
HWS[2]
HWS[3]
HWS[4]
HWS[5]
HWS[6]
HWS[7]
A[1]
A[2]
A[3]
A[4]
A[5]
A[6]
D[0]
D[1]
D[2]
D[3]
D[4]
D[5]
D[6]
D[7]
DTA
DTAN
R18 10K
C47 0.022
+5B
ECK
R/WN
IC2
IC6
IC8
IC7
IC19
IC41
IC9
IC12
IC27
IC36 HCU04
IC38
IC39
LS151
CN5
CN9
CN4
CN14
SW3
PDOHCA
PDPG[0]
PDPG[1]
MU/A[1]
HWRO
C2M
C4M
CHS[0]
CHS[1]
CHS[2]
CHS[3]
CHS[4]
CP[27]
CP[28]
CP[29]
CP[30]
CP[31]
PCM[0]
PCM[1]
PCM[2]
PCM[3]
PCM[4]
PCM[5]
PCM[6]
PCM[7]
PCM[0..7]
R23 130K
R24 150K
C12 100P
R28 1.2k
R32 150K
C11 1.0
R22 91K
C16 100P
R35 100K
R36 120K
C19 100P
R65 560
C20 3300P
R37 56K
C22 100P
R709 4.7K
C25 0.1
R38 100K
R39 120K
C23 100P
R19 560
C24 3300P
R21 62k
C28 0.1
R59 56K
C29 100P
T1
T2
T3
EXT PAG1
EXT PAG2
CN1
OHCAT
OHCAR
JA1
JA2
L11
L25
L12
L7
L8
L24
CPUCK
SRSTN
CSRTCN
CSRAM[1]
CSRAM2N
UWRN
LWRN
IORN
IOWNA
ECK
IRWN
IOCSN
EXTCK
CSROMN
TXD
RXD
POWRSTN
PD15N
C53 18P
X1 12MHZ
R20 1M
C54 18P
SELCK
PLLPRSN
R85 680
R97 10K
PIGN
POGN
MOHMUTE[0]
MOHMUTE[1]
Q601
Q602
Q603
Q604
R610 22K
R611 22K
R48 33k
R220 22k
R53 100K
R115 2.2K
R118 39K
R119 10K
R127 4.7K
R34 33K
C27 0.001
R30 220K
C26 0.1m
R33 4.7K
C86 0.1m
MOH1
L27
T5
Q12
Q11
R116 4.7K
D11
D12
C88 50V2.2m
R117 10K
C87 25V33m
R120 330K
R40 100K
R121 2.2K
R124 39K
R125 10K
R128 4.7K
R51 33K
C31 0.001
R50 220K
R52 4.7K
C30 0.1m
C89 0.1m
MOH2
L26
T4
Q14
Q13
R122 4.7K
D16
D17
C91 50V2.2m
R123 10K
C90 25V33m
R126 330K
R712 10K
R713 NC
R714 0
C704 0.1
R710 390K
R711 100K
C601 16V4.7
C602 16V4.7
C603 0.022
R601 100K
R602 100K
R603 330
R604 150
R605 820K
R606 22K
R609 22K
C604 0.1
R715 0
R608 120K
R712
R713
R714
R710
R711
R601
R602
R603
R604
R605
R606
R609
C601
C602
C603
C604
R715
R608
R48
R220
R53
R115
R118
R119
R127
R34
C27
R30
R33
C26
C86
R116
R117
R120
C87
C88
D11
D12
Q12
Q11
R40
R121
R124
R125
R128
R51
C31
R50
R52
C30
C89
R122
R123
C90
C91
D16
D17
Q14
Q13
R224 1M
C101 22P
C100 22P
X3
R225 33
R226 33
R227 22K
EXTCK
C8M
MCLK
CHS[4]
FHIN
R57 1K
R112 47
R110 47
R111 47
C93 100P
C96 47P
R66 10K
R67 10K
R70 10K
R71 10K
R72 10K
R73 10K
R87 10K
C56 0.022
C94 47P
C95 47P
C33 0.1
C34 0.1
C35 0.1
C36 0.1
C37 0.1
C38 0.1
C82 0.022
C81 0.022
C68 0.022
C83 0.022
+5V
+5B
-5V
-15V
FG
VAG

ORDER NO. KMS0012014S3

Service Manual

DIGITAL SUPER HYBRID SYSTEM

KX-TD1232AL
(for Australia)

1

⚠ WARNING

This service information is designed for experienced repair technicians only and is not designed for use by the general public.
It does not contain warnings or cautions to advise non-technical individuals of potential dangers in attempting to service a product.
Products powered by electricity should be serviced or repaired only by experienced professional technicians. Any attempt to service or repair the product or products dealt with in this service information by anyone else could result in serious injury or death.

Panasonic

1. CHANGES

1.1. Subject

Suffix	Reason for suffix change
N → O	Change of the software. (IC20/IC21:ROM Ver. P121M/P122M → P121N/P122N)
O → P	Change of the CPU board. (PQUP10441YB → PQUP10441YC)

1.2. Suffix location

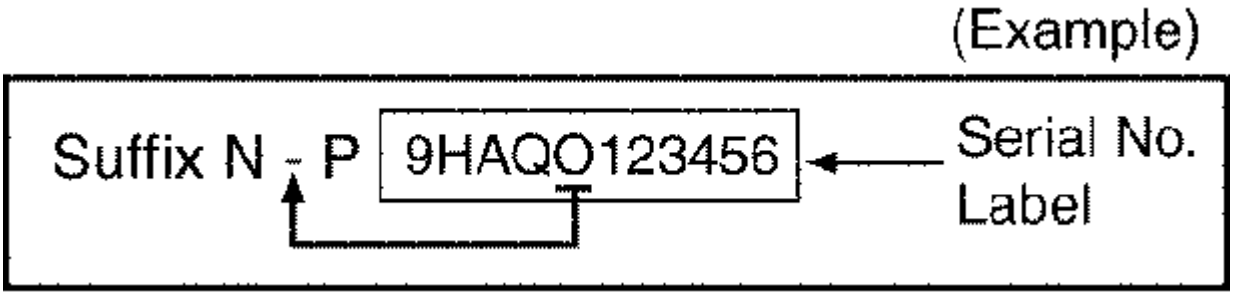

1.3. REPLACEMENT PARTS LIST

Reason for Change (Symbol:A) Following 1-8 reasons are indicated on the Notes in the bottom column.	
1. Improve performance 2. Change of material or dimension 3. To meet approved specification 4. Standard-zation 5. Addition 6. Deletion 7. Correction 8. Other	Remark: 1. Part with mark *1 has not changed on the Supplement-9.

Interchangeability code (Symbol:B) Following V-Z interchangeabilities are indicated on the Notes in the bottom column.		
Parts	Set Production	Description
V Original / New	Early (before change) / Late (after change)	Original or new parts may be used in early or late production sets. Use original parts until exhausted, then stock new parts.
W Original / New	Early (before change) / Late (after change)	Original parts may be used in early production sets only. New parts may be used in early or late production sets. Use original parts where possible, then stock new parts.
X Original / New	Early (before change) / Late (after change)	New parts only may be used in early or late production sets. Stock new parts.
Y Original / New	Early (before change) / Late (after change)	Original parts may be used in early production sets only. New parts may be used in late production sets only. Stock both original and new parts.
Z Other		

Ref. No.	Parts No.		Part Name & description	Pcs	Remarks	Notes		Time c chang (Suffix
	Original Part	New part						
CCESSORIES AND PACKING MATERIALS								
	PSQX1291X	PSQX1291W	ADDITIONAL USER MANUAL	1		1	X	O
	PSQX1339Y	PSQX1399Y	ADDITIONAL USER MANUAL	1		7		
PU BOARD PARTS (All parts are shown bellow.)								
CB1	PSWP11232AL1	PSWP11232AL2	CPU BOARD ASS'Y (RTL)	1		1	V	P
:1	PQVI68301FCG	PQVI68301FCG	IC	1	*1			
:2	PQVI620890F	PQVI620890F	IC	1	*1			
:3	PQVIMT8980DE	PQVIMT8980DE	IC	1	*1			
:6, IC7	PQVIMC45503P	PSVIMC14548V	IC	2		5		P
:8	PQVIMC45503P	PSVIMC14548V	IC	1		1	Y	P
:9	PQVISV7860SG	PQVISV7860SG	IC	1	*1			
:10, IC11	PQVINJM4558D	----------	IC	0		6		P
:12, IC14	PQVINJM4558D	PQVINJM4558D	IC	2	*1			
:13	PQVIPS520C	PSVIPS600CMT	IC	1		1	Y	P
:15	PQVIHD75188P	PQVIHD75188P	IC	1	*1			
:16	PQVIHD75189P	PQVIHD75189P	IC	1	*1			
:17	PSVITC7HT00A	PSVITC7HT00A	IC	1	*1			
:18	PQVISN7L00S	PQVISN7L00S	IC	1	*1			
:19	PSWI21232AL2	PSWI21232AL2	IC (ROM)	1	*1			
:20, IC21	PSWI11232A10	PSWI11232A11	IC (ROM KIT)	1		1	X	O
:22, IC23	PSVILHP832DD	----------	IC	0		6		P
:24	PSVICX582MD	PSVITC5401AE	IC	1		1	Y	P
:25	PSVICX582MD	PSVITC5401AE	IC	1		1	Y	P
:26	PQVIMS6242BS	PQVIMS6242BS	IC	1	*1			
:27	PQVINJM4558D	PQVINJM4558D	IC	1	*1			
:29	PQVISN7L368M	PQVISN7L368M	IC	1	*1			
:31	PQVISN7L640M	PQVISN7L640M	IC	1	*1			
:32	PQVISN7L365S	PQVISN7L365S	IC	1	*1			
:33, IC34	PQVISN7L368M	PQVISN7L368M	IC	2	*1			
:35	PQVISN7L365S	PQVISN7L365S	IC	1	*1			
:36	PQVIMB7HU04F	PQVIMB7HU04F	IC	1	*1			
:37	PQVITC7H00F	PQVITC7H00F	IC	1	*1			
:38	PQVISN7H74S	PQVISN7H74S	IC	1	*1			
:39	PQVISN7L151M	PQVISN7L151M	IC	1	*1			
:40	----------	PQVISN7L32S	IC	1		5	Y	P
5	PQVTDTA144EK	PQVTDTA144EK	TRANSISTOR (SI)	1	*1			
6	2SC2412K	2SC2412K	TRANSISTOR (SI)	1	*1			
7	2SC2412K	2SC2412K	TRANSISTOR (SI)	1	*1			
8	PQVTDTA143E	PQVTDTA143E	TRANSISTOR (SI)	1	*1			

9	PQVTDTC144E	PQVTDTC144E	TRANSISTOR (SI)	1	*1			
10	2SA933	2SA933	TRANSISTOR (SI) (or 2SA1317)	1	*1			
11	2SC2412K	2SC2412K	TRANSISTOR (SI)	1	*1			
12	2SC2878	2SC2878	TRANSISTOR (SI)	1	*1			
13	2SC2412K	2SC2412K	TRANSISTOR (SI)	1	*1			
14	2SC2878	2SC2878	TRANSISTOR (SI)	1	*1			
601	PQVTDTA144EK	PQVTDTA144EK	TRANSISTOR (SI)	1	*1			
602	PQVTDTC144E	PQVTDTC144E	TRANSISTOR (SI)	1	*1			
603	PQVTDTA144EK	PQVTDTA144EK	TRANSISTOR (SI)	1	*1			
604	PQVTDTC144E	PQVTDTC144E	TRANSISTOR (SI)	1	*1			
605	----------	PQVTDTC144E	TRANSISTOR (SI)	1		5		P
606	----------	2SB1237R	TRANSISTOR (SI)	1		5		P
607	----------	PQVTDTC143E	TRANSISTOR (SI)	1		5		P
1	MA4091	MA4091	DIODE (SI)	1	*1			
3	MA723	MA723	DIODE (SI)	1	*1			
4	PQVDAK03	PQVDAK03	DIODE (SI)	1	*1			
7~D10	MA4068	----------	DIODE (SI)	0		6		P
11, D12	RLS71	RLS71	DIODE (SI)	2	*1			
13, D14	MA4030	MA4030	DIODE (SI)	2	*1			
15	MA4056	MA4056	DIODE (SI)	1	*1			
16, D17	RLS71	RLS71	DIODE (SI)	2	*1			
20, D21	MA723	MA723	DIODE (SI)	2	*1			
4	PQ4R10XJ471	ERJ3GEYJ471	RESISTOR, 470 Ω	1		1	Y	P
5	PQ4R10XJ472	ERJ3GEYJ472	RESISTOR, 4.7k Ω	1		1	Y	P
6	PQ4R10XJ223	ERJ3GEYJ223	RESISTOR, 22k Ω	1		1	Y	P
7	PQ4R10XJ103	ERJ3GEYJ103	RESISTOR, 10k Ω	1		1	Y	P
8	PQ4R10XJ683	ERJ3GEYJ683	RESISTOR, 68k Ω	1		1	Y	P
10	PQ4R10XJ224	ERJ3GEYJ224	RESISTOR, 220k Ω	1		1	Y	P
11	PQ4R10XJ681	ERJ3GEYJ681	RESISTOR, 680 Ω	1		1	Y	P
12	PQ4R10XJ393	ERJ3GEYJ393	RESISTOR, 39k Ω	1		1	Y	P
13	PQ4R10XF1782	ERJ3GEYJ183	RESISTOR, 18k Ω	1		1	Y	P
14	PQ4R10XJ104	ERJ3GEYJ104	RESISTOR, 100k Ω	1		1	Y	P
15	PQ4R10XJ103	ERJ3GEYJ103	RESISTOR, 10k Ω	1		1	Y	P
16	PQ4R10XJ274	ERJ3GEYJ274	RESISTOR, 270k Ω	1		1	Y	P
17	PQ4R10XJ183	ERJ3GEYJ183	RESISTOR, 18k Ω	1		1	Y	P
18	PQ4R10XJ103	ERJ3GEYJ103	RESISTOR, 10k Ω	1		1	Y	P
19	PQ4R10XJ561	ERJ3GEYJ561	RESISTOR, 560 Ω	1		1	Y	P
20	PQ4R10XJ105	ERJ3GEYJ105	RESISTOR, 1M Ω	1		1	Y	P
21	PQ4R10XJ563	ERJ3GEYJ623	RESISTOR, 62k Ω	1		1	Y	P
22	PQ4R10XJ104	ERJ3GEYJ913	RESISTOR, 91k Ω	1		1	Y	P
23	PQ4R10XJ104	ERJ3GEYJ134	RESISTOR, 130k Ω	1		1	Y	P
24	PQ4R10XJ124	ERJ3GEYJ154	RESISTOR, 150k Ω	1		1	Y	P
25	PQ4R10XJ823	----------	RESISTOR, 82k Ω	0		6		P

26	PQ4R10XJ104	----------	RESISTOR, 100k Ω	0		6		P
27	PQ4R10XJ104	----------	RESISTOR, 100k Ω	0		6		P
28	PQ4R10XF1211	ERJ3GEYF122	RESISTOR, 1.2k Ω	1		1	Y	P
29	PQ4R10XF1211	----------	RESISTOR, 1.21k Ω	0		6		P
30	PQ4R10XJ224	ERJ3GEYJ224	RESISTOR, 220k Ω	1		1	Y	P
31	PQ4R10XF1401	----------	RESISTOR, 1.4k Ω	0		6		P
32	PQ4R10XJ823	ERJ3GEYJ154	RESISTOR, 150k Ω	1		1	Y	P
33	PQ4R10XJ472	ERJ3GEYJ472	RESISTOR, 4.7k Ω	1		1	Y	P
34	PQ4R10XJ333	ERJ3GEYJ333	RESISTOR, 33k Ω	1		1	Y	P
35	PQ4R10XJ104	ERJ3GEYJ104	RESISTOR, 100k Ω	1		1	Y	P
36	PQ4R10XJ124	ERJ3GEYJ124	RESISTOR, 120k Ω	1		1	Y	P
37	PQ4R10XJ104	ERJ3GEYJ563	RESISTOR, 56k Ω	1		1	Y	P
38	PQ4R10XJ104	ERJ3GEYJ104	RESISTOR, 100k Ω	1		1	Y	P
39	PQ4R10XJ124	ERJ3GEYJ124	RESISTOR, 120k Ω	1		1	Y	P
40	PQ4R10XJ104	ERJ3GEYJ104	RESISTOR, 100k Ω	1		1	Y	P
48	PQ4R10XJ333	ERJ3GEYJ333	RESISTOR, 33k Ω	1		1	Y	P
50	PQ4R10XJ224	ERJ3GEYJ224	RESISTOR, 220k Ω	1		1	Y	P
51	PQ4R10XJ333	ERJ3GEYJ333	RESISTOR, 33k Ω	1		1	Y	P
52	PQ4R10XJ472	ERJ3GEYJ472	RESISTOR, 4.7k Ω	1		1	Y	P
53	PQ4R10XJ104	ERJ3GEYJ104	RESISTOR, 100k Ω	1		1	Y	P
57	PQ4R10XJ102	ERJ3GEYJ102	RESISTOR, 1k Ω	1		1	Y	P
59	PQ4R10XJ104	ERJ3GEYJ563	RESISTOR, 56k Ω	1		1	Y	P
61	PQ4R10XJ103	ERJ3GEYJ103	RESISTOR, 10k Ω	1		1	Y	P
62	PQ4R10XJ223	ERJ3GEYJ223	RESISTOR, 22k Ω	1		1	Y	P
65	PQ4R10XJ561	ERJ3GEYJ561	RESISTOR, 560 Ω	1		1	Y	P
66	PQ4R10XJ103	ERJ3GEYJ103	RESISTOR, 10k Ω	1		1	Y	P
67	PQ4R10XJ103	ERJ3GEYJ103	RESISTOR, 10k Ω	1		1	Y	P
68	PQ4R10XJ103	ERJ3GEYJ103	RESISTOR, 10k Ω	1		1	Y	P
69	PQ4R10XJ103	ERJ3GEYJ103	RESISTOR, 10k Ω	1		1	Y	P
70	PQ4R10XJ103	ERJ3GEYJ103	RESISTOR, 10k Ω	1		1	Y	P
71	PQ4R10XJ103	ERJ3GEYJ103	RESISTOR, 10k Ω	1		1	Y	P
72	PQ4R10XJ103	ERJ3GEYJ103	RESISTOR, 10k Ω	1		1	Y	P
73	PQ4R10XJ103	ERJ3GEYJ103	RESISTOR, 10k Ω	1		1	Y	P
74	PQ4R10XJ103	ERJ3GEYJ103	RESISTOR, 10k Ω	1		1	Y	P
75	PQ4R10XJ103	ERJ3GEYJ103	RESISTOR, 10k Ω	1		1	Y	P
76	PQ4R10XJ103	ERJ3GEYJ103	RESISTOR, 10k Ω	1		1	Y	P
77	PQ4R10XJ103	ERJ3GEYJ103	RESISTOR, 10k Ω	1		1	Y	P
78	PQ4R10XJ103	ERJ3GEYJ103	RESISTOR, 10k Ω	1		1	Y	P
79	PQ4R10XJ103	ERJ3GEYJ103	RESISTOR, 10k Ω	1		1	Y	P
83	PQRD1VJ151	PQRD1VJ151	RESISTOR, 150 Ω	1	*1			P
84	PQ4R10XJ152	ERJ3GEYJ152	RESISTOR, 1.5k Ω	1		1	Y	P
85	PQ4R10XJ681	ERJ3GEYJ681	RESISTOR, 680 Ω	1		1	Y	P
87	PQ4R10XJ103	ERJ3GEYJ103	RESISTOR, 10k Ω	1		1	Y	P
91	PQ4R10XJ103	ERJ3GEYJ103	RESISTOR, 10k Ω	1		1	Y	P

92	PQ4R10XJ103	ERJ3GEYJ103	RESISTOR, 10k Ω	1		1	Y	P
93	PQ4R10XJ103	ERJ3GEYJ103	RESISTOR, 10k Ω	1		1	Y	P
94	PQ4R10XJ103	ERJ3GEYJ103	RESISTOR, 10k Ω	1		1	Y	P
96	PQ4R10XJ103	ERJ3GEYJ103	RESISTOR, 10k Ω	1		1	Y	P
97	PQ4R10XJ103	ERJ3GEYJ103	RESISTOR, 10k Ω	1		1	Y	P
110	PQ4R10XJ470	ERJ3GEYJ470	RESISTOR, 47 Ω	1		1	Y	P
111	PQ4R10XJ470	ERJ3GEYJ470	RESISTOR, 47 Ω	1		1	Y	P
112	PQ4R10XJ470	ERJ3GEYJ470	RESISTOR, 47 Ω	1		1	Y	P
113	PQ4R10XJ103	ERJ3GEYJ103	RESISTOR, 10k Ω	1		1	Y	P
114	PQ4R10XJ103	ERJ3GEYJ103	RESISTOR, 10k Ω	1		1	Y	P
115	PQ4R10XJ222	ERJ3GEYJ222	RESISTOR, 2.2k Ω	1		1	Y	P
116	PQ4R10XJ472	ERJ3GEYJ472	RESISTOR, 4.7k Ω	1		1	Y	P
117	PQ4R10XJ103	ERJ3GEYJ103	RESISTOR, 10k Ω	1		1	Y	P
118	PQ4R10XJ333	ERJ3GEYJ333	RESISTOR, 33k Ω	1		1	Y	P
119	PQ4R10XJ103	ERJ3GEYJ103	RESISTOR, 10k Ω	1		1	Y	P
120	PQ4R10XJ334	ERJ3GEYJ334	RESISTOR, 330k Ω	1		1	Y	P
121	PQ4R10XJ222	ERJ3GEYJ222	RESISTOR, 2.2k Ω	1		1	Y	P
122	PQ4R10XJ472	ERJ3GEYJ472	RESISTOR, 4.7k Ω	1		1	Y	P
123	PQ4R10XJ103	ERJ3GEYJ103	RESISTOR, 10k Ω	1		1	Y	P
124	PQ4R10XJ333	ERJ3GEYJ333	RESISTOR, 33k Ω	1		1	Y	P
125	PQ4R10XJ103	ERJ3GEYJ103	RESISTOR, 10k Ω	1		1	Y	P
126	PQ4R10XJ334	ERJ3GEYJ334	RESISTOR, 330k Ω	1		1	Y	P
127	PQ4R10XJ472	ERJ3GEYJ472	RESISTOR, 4.7k Ω	1		1	Y	P
128	PQ4R10XJ472	ERJ3GEYJ472	RESISTOR, 4.7k Ω	1		1	Y	P
129	PQ4R10XJ470	ERJ3GEYJ470	RESISTOR, 47 Ω	1		1	Y	P
130	PQ4R10XJ470	ERJ3GEYJ470	RESISTOR, 47 Ω	1		1	Y	P
131	PQ4R10XJ470	ERJ3GEYJ470	RESISTOR, 47 Ω	1		1	Y	P
132	PQ4R10XJ470	ERJ3GEYJ470	RESISTOR, 47 Ω	1		1	Y	P
133	PQ4R10XJ470	ERJ3GEYJ470	RESISTOR, 47 Ω	1		1	Y	P
134	PQ4R10XJ390	ERJ3GEYJ390	RESISTOR, 39 Ω	1		1	Y	P
135	PQ4R10XJ470	ERJ3GEYJ470	RESISTOR, 47 Ω	1		1	Y	P
136	PQ4R10XJ470	ERJ3GEYJ470	RESISTOR, 47 Ω	1		1	Y	P
137	PQ4R10XJ470	ERJ3GEYJ470	RESISTOR, 47 Ω	1		1	Y	P
138	PQ4R10XJ101	ERJ3GEYJ101	RESISTOR, 100 Ω	1		1	Y	P
139	PQ4R10XJ101	ERJ3GEYJ101	RESISTOR, 100 Ω	1		1	Y	P
140	PQ4R10XJ101	ERJ3GEYJ101	RESISTOR, 100 Ω	1		1	Y	P
141	PQ4R10XJ101	ERJ3GEYJ101	RESISTOR, 100 Ω	1		1	Y	P
142	PQ4R10XJ101	ERJ3GEYJ101	RESISTOR, 100 Ω	1		1	Y	P
143	PQ4R10XJ101	ERJ3GEYJ101	RESISTOR, 100 Ω	1		1	Y	P
144	PQ4R10XJ101	ERJ3GEYJ101	RESISTOR, 100 Ω	1		1	Y	P
145	PQ4R10XJ101	ERJ3GEYJ101	RESISTOR, 100 Ω	1		1	Y	P
146	PQ4R10XJ470	ERJ3GEYJ470	RESISTOR, 47 Ω	1		1	Y	P
147	PQ4R10XJ470	ERJ3GEYJ470	RESISTOR, 47 Ω	1		1	Y	P
148	PQ4R10XJ470	ERJ3GEYJ470	RESISTOR, 47 Ω	1		1	Y	P

149	PQ4R10XJ470	ERJ3GEYJ470	RESISTOR, 47 Ω	1		1	Y	P
150	PQ4R10XJ470	ERJ3GEYJ470	RESISTOR, 47 Ω	1		1	Y	P
151	PQ4R10XJ470	ERJ3GEYJ470	RESISTOR, 47 Ω	1		1	Y	P
152	PQ4R10XJ470	ERJ3GEYJ470	RESISTOR, 47 Ω	1		1	Y	P
153	PQ4R10XJ470	ERJ3GEYJ470	RESISTOR, 47 Ω	1		1	Y	P
154	PQ4R10XJ470	ERJ3GEYJ470	RESISTOR, 47 Ω	1		1	Y	P
155	PQ4R10XJ470	ERJ3GEYJ470	RESISTOR, 47 Ω	1		1	Y	P
156	PQ4R10XJ470	ERJ3GEYJ470	RESISTOR, 47 Ω	1		1	Y	P
157	PQ4R10XJ470	ERJ3GEYJ470	RESISTOR, 47 Ω	1		1	Y	P
158	PQ4R10XJ470	ERJ3GEYJ470	RESISTOR, 47 Ω	1		1	Y	P
159	PQ4R10XJ470	ERJ3GEYJ470	RESISTOR, 47 Ω	1		1	Y	P
160	PQ4R10XJ470	ERJ3GEYJ470	RESISTOR, 47 Ω	1		1	Y	P
161	PQ4R10XJ390	ERJ3GEYJ390	RESISTOR, 39 Ω	1		1	Y	P
162	PQ4R10XJ330	ERJ3GEYJ330	RESISTOR, 33 Ω	1		1	Y	P
163	PQ4R10XJ560	ERJ3GEYJ560	RESISTOR, 56 Ω	1		1	Y	P
164	PQ4R10XJ560	ERJ3GEYJ560	RESISTOR, 56 Ω	1		1	Y	P
165	PQ4R10XJ560	ERJ3GEYJ560	RESISTOR, 56 Ω	1		1	Y	P
166	PQ4R10XJ560	ERJ3GEYJ560	RESISTOR, 56 Ω	1		1	Y	P
167	PQ4R10XJ560	ERJ3GEYJ560	RESISTOR, 56 Ω	1		1	Y	P
168	PQ4R10XJ560	ERJ3GEYJ560	RESISTOR, 56 Ω	1		1	Y	P
169	PQ4R10XJ560	ERJ3GEYJ560	RESISTOR, 56 Ω	1		1	Y	P
170	PQ4R10XJ560	ERJ3GEYJ560	RESISTOR, 56 Ω	1		1	Y	P
171	PQ4R10XJ560	ERJ3GEYJ560	RESISTOR, 56 Ω	1		1	Y	P
172	PQ4R10XJ560	ERJ3GEYJ560	RESISTOR, 56 Ω	1		1	Y	P
173	PQ4R10XJ560	ERJ3GEYJ560	RESISTOR, 56 Ω	1		1	Y	P
174	PQ4R10XJ560	ERJ3GEYJ560	RESISTOR, 56 Ω	1		1	Y	P
175	PQ4R10XJ560	ERJ3GEYJ560	RESISTOR, 56 Ω	1		1	Y	P
176	PQ4R10XJ560	ERJ3GEYJ560	RESISTOR, 56 Ω	1		1	Y	P
177	PQ4R10XJ560	ERJ3GEYJ560	RESISTOR, 56 Ω	1		1	Y	P
178	PQ4R10XJ560	ERJ3GEYJ560	RESISTOR, 56 Ω	1		1	Y	P
179	PQ4R10XJ560	ERJ3GEYJ560	RESISTOR, 56 Ω	1		1	Y	P
180	PQ4R10XJ560	ERJ3GEYJ560	RESISTOR, 56 Ω	1		1	Y	P
181	PQ4R10XJ560	ERJ3GEYJ560	RESISTOR, 56 Ω	1		1	Y	P
182	PQ4R10XJ560	ERJ3GEYJ560	RESISTOR, 56 Ω	1		1	Y	P
183	PQ4R10XJ560	ERJ3GEYJ560	RESISTOR, 56 Ω	1		1	Y	P
184	PQ4R10XJ560	ERJ3GEYJ560	RESISTOR, 56 Ω	1		1	Y	P
185	PQ4R10XJ560	ERJ3GEYJ560	RESISTOR, 56 Ω	1		1	Y	P
186	PQ4R10XJ560	ERJ3GEYJ560	RESISTOR, 56 Ω	1		1	Y	P
187	PQ4R10XJ560	ERJ3GEYJ560	RESISTOR, 56 Ω	1		1	Y	P
188	PQ4R10XJ560	ERJ3GEYJ560	RESISTOR, 56 Ω	1		1	Y	P
189	PQ4R10XJ560	ERJ3GEYJ560	RESISTOR, 56 Ω	1		1	Y	P
190	PQ4R10XJ560	ERJ3GEYJ560	RESISTOR, 56 Ω	1		1	Y	P
191	PQ4R10XJ560	ERJ3GEYJ560	RESISTOR, 56 Ω	1		1	Y	P
192	PQ4R10XJ560	ERJ3GEYJ560	RESISTOR, 56 Ω	1		1	Y	P

193	PQ4R10XJ560	ERJ3GEYJ560	RESISTOR, 56 Ω	1		1	Y	P
194	PQ4R10XJ560	ERJ3GEYJ560	RESISTOR, 56 Ω	1		1	Y	P
195	PQ4R10XJ560	ERJ3GEYJ560	RESISTOR, 56 Ω	1		1	Y	P
196	PQ4R10XJ560	ERJ3GEYJ560	RESISTOR, 56 Ω	1		1	Y	P
197	PQ4R10XJ560	ERJ3GEYJ560	RESISTOR, 56 Ω	1		1	Y	P
198	PQ4R10XJ560	ERJ3GEYJ560	RESISTOR, 56 Ω	1		1	Y	P
199	PQ4R10XJ560	ERJ3GEYJ560	RESISTOR, 56 Ω	1		1	Y	P
200	PQ4R10XJ560	ERJ3GEYJ560	RESISTOR, 56 Ω	1		1	Y	P
201	PQ4R10XJ102	ERJ3GEYJ102	RESISTOR, 1k Ω	1		1	Y	P
202	PQ4R10XJ102	ERJ3GEYJ102	RESISTOR, 1k Ω	1		1	Y	P
203	PQ4R10XJ102	ERJ3GEYJ102	RESISTOR, 1k Ω	1		1	Y	P
204	PQ4R10XJ103	ERJ3GEYJ103	RESISTOR, 10k Ω	1		1	Y	P
205	PQ4R10XJ103	ERJ3GEYJ103	RESISTOR, 10k Ω	1		1	Y	P
206	PQ4R10XJ103	ERJ3GEYJ103	RESISTOR, 10k Ω	1		1	Y	P
207	PQ4R10XJ103	ERJ3GEYJ103	RESISTOR, 10k Ω	1		1	Y	P
208	PQ4R10XJ103	ERJ3GEYJ103	RESISTOR, 10k Ω	1		1	Y	P
209	PQ4R10XJ103	ERJ3GEYJ103	RESISTOR, 10k Ω	1		1	Y	P
210	PQ4R10XJ103	ERJ3GEYJ103	RESISTOR, 10k Ω	1		1	Y	P
211	PQ4R10XJ103	ERJ3GEYJ103	RESISTOR, 10k Ω	1		1	Y	P
212	PQ4R10XJ103	ERJ3GEYJ103	RESISTOR, 10k Ω	1		1	Y	P
213	PQ4R10XJ103	ERJ3GEYJ103	RESISTOR, 10k Ω	1		1	Y	P
214	PQ4R10XJ103	ERJ3GEYJ103	RESISTOR, 10k Ω	1		1	Y	P
215	PQ4R10XJ103	ERJ3GEYJ103	RESISTOR, 10k Ω	1		1	Y	P
216	PQ4R10XJ103	ERJ3GEYJ103	RESISTOR, 10k Ω	1		1	Y	P
217	PQ4R10XJ103	ERJ3GEYJ103	RESISTOR, 10k Ω	1		1	Y	P
218	PQ4R10XJ103	ERJ3GEYJ103	RESISTOR, 10k Ω	1		1	Y	P
219	PQ4R10XJ103	ERJ3GEYJ103	RESISTOR, 10k Ω	1		1	Y	P
220	PQ4R10XJ223	ERJ3GEYJ223	RESISTOR, 22k Ω	1		1	Y	P
221	PQ4R10XJ222	ERJ3GEYJ222	RESISTOR, 2.2k Ω	1		1	Y	P
222	PQ4R10XJ103	ERJ3GEYJ103	RESISTOR, 10k Ω	1		1	Y	P
223	PQ4R10XJ223	ERJ3GEYJ223	RESISTOR, 22k Ω	1		1	Y	P
224	PQ4R10XJ105	ERJ3GEYJ105	RESISTOR, 1M Ω	1		1	Y	P
225, R226	PQ4R10XJ330	ERJ3GEYJ330	RESISTOR, 33 Ω	2		1	Y	P
227	PQ4R10XJ223	ERJ3GEYJ223	RESISTOR, 22k Ω	1		1	Y	P
228	PQ4R10XJ103	ERJ3GEYJ103	RESISTOR, 10k Ω	1		1	Y	P
229	PQ4R10XJ560	ERJ3GEYJ560	RESISTOR, 56 Ω	1		1	Y	P
601, R602	PQ4R10XJ104	ERJ3GEYJ104	RESISTOR, 100k Ω	2		1	Y	P
603	PQ4R10XJ331	ERJ3GEYJ331	RESISTOR, 300 Ω	1		1	Y	P
604	PQ4R10XJ151	ERJ3GEYJ151	RESISTOR, 150 Ω	1		1	Y	P
605	PQ4R10XJ824	ERJ3GEYJ824	RESISTOR, 820k Ω	1		1	Y	P
606	PQ4R10XJ223	ERJ3GEYJ223	RESISTOR, 22k Ω	1		1	Y	P
608	PQ4R10XJ124	ERJ3GEYJ124	RESISTOR, 120k Ω	1		1	Y	P
609	PQ4R10XJ223	ERJ3GEYJ223	RESISTOR, 22k Ω	1		1	Y	P
610, R611	PQ4R10XJ223	ERJ3GEYJ223	RESISTOR, 22k Ω	2		1	Y	P

704	----------	ERJ3GEYJ103	RESISTOR, 10k Ω	1		5		P
705	----------	PQRD1VJ220	RESISTOR, 22 Ω	1		5		P
706	----------	ERJ3GEY0R00	RESISTOR, 0 Ω	1		5		P
707	----------	ERJ3GEYJ561	RESISTOR, 560 Ω	1		5		P
709	----------	ERJ3GEYJ472	RESISTOR, 4.7k Ω	1		5		P
715	----------	ERJ3GEY0R00	RESISTOR, 0 Ω	1		5		P
L	PQ4R10XJ000	ERJ3GEY0R00	RESISTOR, 0 Ω	1		1	Y	P
3, J6	PQ4R10XJ000	ERJ3GEY0R00	RESISTOR, 0 Ω	2		1	Y	P
L6	PQ4R10XJ223	ERJ3GEYJ223	RESISTOR, 22k Ω	1		1	Y	P
1	EECFE5R5474	EECFE5R5474	CAPACITOR, 0.47 μ F	1	*1			
2	ECEA1EU4R7	ECEA1EU4R7	CAPACITOR, 4.7 μ F	1	*1			
3	ECEA1HN3R3S	ECEA1HN3R3S	CAPACITOR, 3.3 μ F	1	*1			
8	ECQV1H104JZ	ECQV1H104JZ	CAPACITOR, 0.1 μ F	1	*1			
9	ECQV1H104JZ	ECQV1H104JZ	CAPACITOR, 0.1 μ F	1	*1			
11	PQCUV1E104MD	PQCUV1H105JC	CAPACITOR, 1 μ F	1		1	Y	P
12	PQCUV1H101JC	ECUV1H101JCV	CAPACITOR, 100pF	1		1	Y	P
13	PQCUV1H682KB	----------	CAPACITOR, 0.0068 μ F	0		6		P
14	PQCUV1H680JC	ECUV1H680JCV	CAPACITOR, 68pF	1		1	Y	P
16	PQCUV1H101JC	ECUV1H101JCV	CAPACITOR, 100pF	1		1	Y	P
17	PQCUV1E104MD	----------	CAPACITOR, 0.1 μ F	0		6		P
19	PQCUV1H101JC	ECUV1H101JCV	CAPACITOR, 100pF	1		1	Y	P
20	PQCUV1H332KB	ECUV1H332KBV	CAPACITOR, 0.0033 μ F	1		1	Y	P
21	PQCUV1E104MD	----------	CAPACITOR, 0.1 μ F	0		6		P
22	PQCUV1H101JC	ECUV1H101JCV	CAPACITOR, 100pF	1		1	Y	P
23	PQCUV1H101JC	ECUV1H101JCV	CAPACITOR, 100pF	1		1	Y	P
24	PQCUV1H332KB	ECUV1H332KBV	CAPACITOR, 0.0033 μ F	1		1	Y	P
25	PQCUV1E104MD	ECUV1C104KBV	CAPACITOR, 0.1 μ F	1		1	Y	P
26	PQCUV1E104MD	ECUV1C104KBV	CAPACITOR, 0.1 μ F	1		1	Y	P
27	PQCUV1H102J	ECUV1H102KBV	CAPACITOR, 0.001 μ F	1		1	Y	P
28	PQCUV1E104MD	ECUV1C104KBV	CAPACITOR, 0.1 μ F	1		1	Y	P
29	PQCUV1H101JC	ECUV1H101JCV	CAPACITOR, 100pF	1		1	Y	P
30	PQCUV1E104MD	ECUV1C104KBV	CAPACITOR, 0.1 μ F	1		1	Y	P
31	PQCUV1H102J	ECUV1H102KBV	CAPACITOR, 0.001 μ F	1		1	Y	P
33	----------	ECUV1C104KBV	CAPACITOR, 0.1 μ F	1		5	Y	P
34	----------	ECUV1C104KBV	CAPACITOR, 0.1 μ F	1		5	Y	P
35	PQCUV1H223KB	ECUV1C104KBV	CAPACITOR, 0.1 μ F	1		1	Y	P
36	PQCUV1H223KB	ECUV1C104KBV	CAPACITOR, 0.1 μ F	1		1	Y	P
37	PQCUV1H223KB	ECUV1C104KBV	CAPACITOR, 0.1 μ F	1		1	Y	P
38	PQCUV1H223KB	ECUV1C104KBV	CAPACITOR, 0.1 μ F	1		1	Y	P
39	PQCUV1H200JC	ECUV1H200JCV	CAPACITOR, 20pF	1		1	Y	P
40	PQCUV1H223KB	ECUV1H223KBV	CAPACITOR, 0.022 μ F	1		1	Y	P

41	PQCUV1H223KB	ECUV1H223KBV	CAPACITOR, 0.022 μ F	1		1	Y	P
42	PQCUV1H223KB	----------	CAPACITOR, 0.022 μ F	0		6		P
43	PQCUV1H223KB	----------	CAPACITOR, 0.022 μ F	0		6		P
44	PQCUV1H223KB	ECUV1H223KBV	CAPACITOR, 0.022 μ F	1		1	Y	P
45	PQCUV1H223KB	ECUV1H223KBV	CAPACITOR, 0.022 μ F	1		1	Y	P
46	PQCUV1H223KB	ECUV1H223KBV	CAPACITOR, 0.022 μ F	1		1	Y	P
47	PQCUV1H223KB	ECUV1H223KBV	CAPACITOR, 0.022 μ F	1		1	Y	P
50	ECEA1AU331	ECEA1AU331	CAPACITOR, 330	1	*1			
53	PQCUV1H180JC	ECUV1H180JCV	CAPACITOR, 18pF	1		1	Y	P
54	PQCUV1H180JC	ECUV1H180JCV	CAPACITOR, 18pF	1		1	Y	P
55	PQCUV1H223KB	ECUV1H223KBV	CAPACITOR, 0.022 μ F	1		1	Y	P
56	PQCUV1H223KB	ECUV1H223KBV	CAPACITOR, 0.022 μ F	1		1	Y	P
59	ECEA1HU010	ECEA1HU010	CAPACITOR, 1 μ F	1	*1			
60	ECEA1HU010	ECEA1HU010	CAPACITOR, 1 μ F	1	*1			
61	ECEA1HU010	ECEA1HU010	CAPACITOR, 1 μ F	1	*1			
62	ECEA1HU010	ECEA1HU010	CAPACITOR, 1 μ F	1	*1			
63	ECEA1HU010	ECEA1HU010	CAPACITOR, 1 μ F	1	*1			
64	PQCUV1H223KB	ECUV1H223KBV	CAPACITOR, 0.022 μ F	1		1	Y	P
66	ECEA1AU101	ECEA1AU101	CAPACITOR, 100 μ F	1	*1			
67	PQCUV1H223KB	ECUV1H223KBV	CAPACITOR, 0.022 μ F	1		1	Y	P
68	PQCUV1H223KB	ECUV1H223KBV	CAPACITOR, 0.022 μ F	1		1	Y	P
70	PQCUV1H223KB	ECUV1H223KBV	CAPACITOR, 0.022 μ F	1		1	Y	P
71	PQCUV1H223KB	ECUV1H223KBV	CAPACITOR, 0.022 μ F	1		1	Y	P
72	PQCUV1H223KB	ECUV1H223KBV	CAPACITOR, 0.022 μ F	1		1	Y	P
80	PQCUV1H200JC	ECUV1H200JCV	CAPACITOR, 20pF	1		1	Y	P
81	PQCUV1H223KB	ECUV1H223KBV	CAPACITOR, 0.022 μ F	1		1	Y	P
82	PQCUV1H223KB	ECUV1H223KBV	CAPACITOR, 0.022 μ F	1		1	Y	P
83	PQCUV1H223KB	ECUV1H223KBV	CAPACITOR, 0.022 μ F	1		1	Y	P
84	PQCUV1H223KB	ECUV1H223KBV	CAPACITOR, 0.022 μ F	1		1	Y	P
85	PQCUV1H223KB	ECUV1H223KBV	CAPACITOR, 0.022 μ F	1		1	Y	P
86	PQCUV1E104MD	ECUV1C104KBV	CAPACITOR, 1 μ F	1		1	Y	P
87	ECEA1VU330	ECEA1VU330	CAPACITOR, 33 μ F	1	*1			
88	ECEA1HN2R2S	ECEA1HN2R2S	CAPACITOR, 2.2 μ F	1	*1			
89	PQCUV1E104MD	ECUV1C104KBV	CAPACITOR, 0.1 μ F	1		1	Y	P
90	ECEA1VU330	ECEA1VU330	CAPACITOR, 33 μ F	1	*1			
91	ECEA1HN2R2S	ECEA1HN2R2S	CAPACITOR, 2.2 μ F	1	*1			
92	PQCUV1H101JC	ECUV1H101JCV	CAPACITOR, 100pF	1		1	Y	P
93	PQCUV1H101JC	ECUV1H101JCV	CAPACITOR, 100pF	1		1	Y	P
94	PQCUV1H470JC	ECUV1H470JCV	CAPACITOR, 47pF	1		1	Y	P
95	PQCUV1H470JC	ECUV1H470JCV	CAPACITOR, 47pF	1		1	Y	P
96	PQCUV1H470JC	ECUV1H470JCV	CAPACITOR, 47pF	1		1	Y	P

97	PQCUV1H223KB	ECUV1H223KBV	CAPACITOR, 0.022 μ F	1		1	Y	P
98	PQCUV1H223KB	ECUV1H223KBV	CAPACITOR, 0.022 μ F	1		1	Y	P
99	PQCUV1H223KB	ECUV1H223KBV	CAPACITOR, 0.022 μ F	1		1	Y	P
100, C101	PQCUV1H220JC	ECUV1H220JCV	CAPACITOR, 22pF	2		1	Y	P
102	PQCUV1H223KB	ECUV1H223KBV	CAPACITOR, 0.022 μ F	1		1	Y	P
501	ECEA1EU4R7	ECEA1EU4R7	CAPACITOR, 4.7 μ F	1	*1			
502	ECEA1EU4R7	ECEA1EU4R7	CAPACITOR, 4.7 μ F	1	*1			
503	PQCUV1H223KB	ECUV1H223KBV	CAPACITOR, 0.022 μ F	1		1	Y	P
504	PQCUV1H104ZF	ECUV1C104KBV	CAPACITOR, 0.1 μ F	1		1	Y	P
705	----------	ECUV1H223KBV	CAPACITOR, 0.022 μ F	1		5		P
L	ETA14Y180AY	ETA14Y180AY	TRANSFORMER	1	*1			
2~L5	PQLT2D6A	PQLT2D6A	TRANSFORMER	4	*1			
7~L14	PQLE106	PQLE106	COIL	*1	8			
21~L23	PQVFTU50MT	PQVFTU50MT	CERAMIC FILTER	3	*1			
24~L27	PQVFCM04RC01	PQVFCM04RC01	CERAMIC FILTER	4	*1			
30	PQLE106	PQLE106	COIL	1	*1			
AC1, JAC2	PQJJ1G1Z	PQJJ1G1Z	JACK, PAGING	2	*1			
AC3, JAC4	PQJJ1D3Z	PQJJ1D3Z	JACK, EP, EXT. HOLD	2	*1			
N1	PSJS64R55Z	PSJS64R55Z	CONNECTOR, 64P	1	*1			
N4	PQJP2D70Z	PQJP2D70Z	CONNECTOR, 2P	1	*1			
N5~CN8	PSJS20A25Z	PSJS20A25Z	CONNECTOR, 20P	4	*1			
N12	PQJP6D70Z	PQJP6D70Z	CONNECTOR, 6P	1	*1			
N13	PQJS6H30Z	PQJS6H30Z	CONNECTOR, 6P	1	*1			
N14	PQJS4H30Z	PQJS4H30Z	CONNECTOR, 4P	1	*1			
AT	CR23541GUF	CR23541GUF	LITHIUM BATTERY	1	*1			
W1	EVQ21409K	EVQ21409K	SWITCH	1	*1			
W2	PQSS2A24Z	PQSS2A24Z	SWITCH	1	*1			
W3	ESD11V120	ESD11V120	SWITCH	1	*1			
1	PQVCJ12000NB	PQVCJ12000N8	CRYSTAL OSCILLATOR	7				
2	PQVCL3276N6Z	PQVCL3276N6Z	CRYSTAL OSCILLATOR	1	*1			
3	PQVCJ8192N8Z	PQVCJ8192N8Z	CRYSTAL OSCILLATOR	1	*1			
L, Z2, 4~Z6	PQRSLD8X103J	PQRSLD8X103J	RESISTOR ARRAY	5	*1			

2. PRINTED CIRCUIT BOARD (CPU BOARD)

2.1. Change from Supplement-2 page 3.

Bottom View

2.2. Change from Supplement-2 page 4.

Component View

3. SCHEMATIC DIAGRAM (CPU CIRCUIT)

3.1. Change from Original Service Manual page 73~75.

N.T
KXTD1232AL

[1] © 2001 Kyushu Matsushita Electric Co., Ltd. All rights reserved.
Unauthorized copying and distribution is a violation of law.

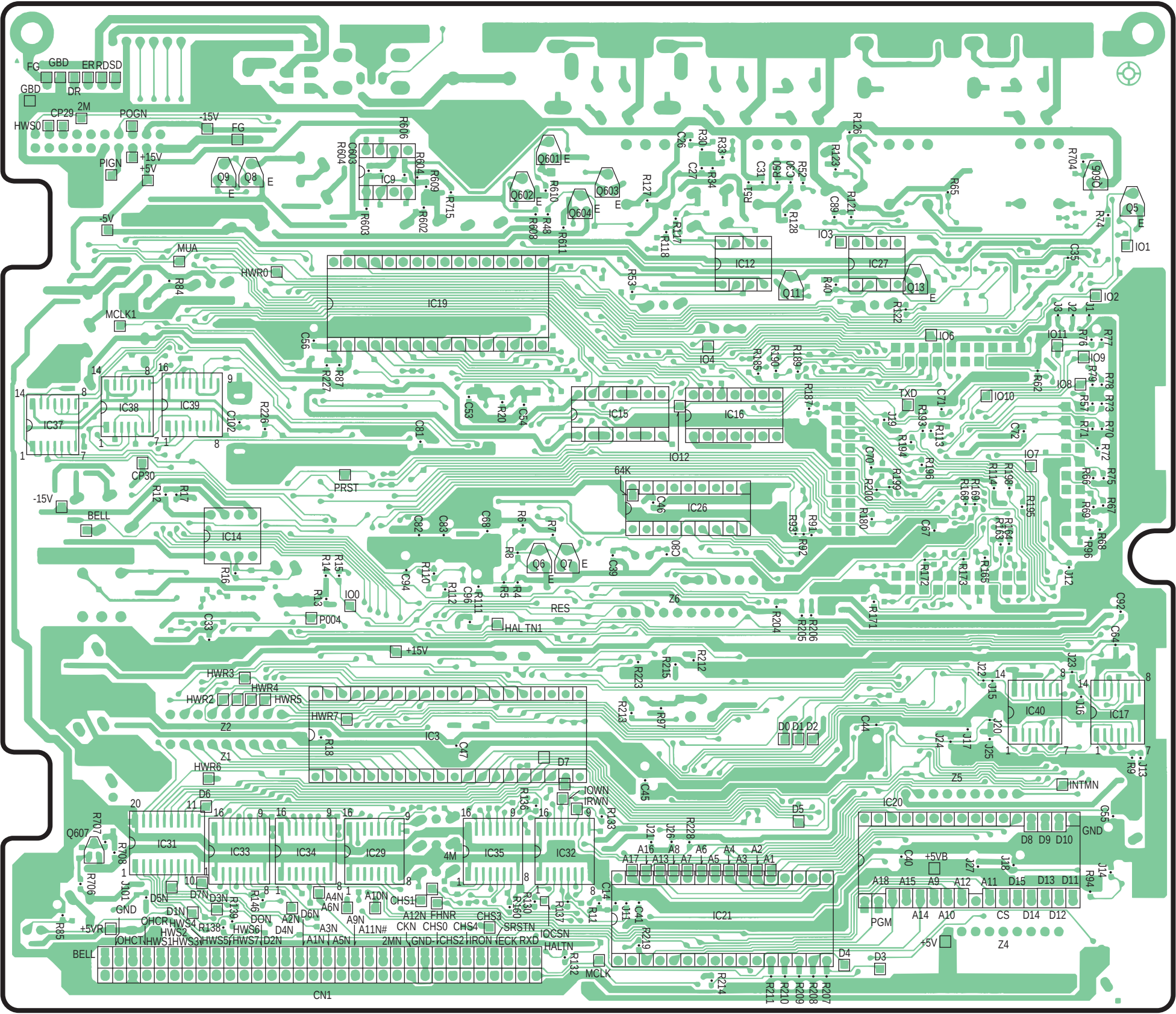

FG
GBD
ER
RD
SD
DR
CP29
2M
HWS0
POGN
-15V
PIGN
+15V
+5V
-5V
MUA
HWR0
MCLK1
IC19
IC12
IC27
IC38
IC39
IC37
IC15
IC16
IC26
IC14
IC3
IC40
IC17
IC31
IC33
IC34
IC29
IC35
IC32
IC21
IC20
IO1
IO2
IO3
IO4
IO6
IO7
IO8
IO9
IO10
IO11
IO12
TXD
PRST
BELL
64K
RES
HAL TN1
P004
IO0
HWR3
HWR4
HWR2
HWR5
HWR7
HWR6
Z1
Z2
Z5
Z6
Z4
IOWN
IRWN
INTMN
GND
+5VB
+5V
PGM
CS
CN1
MCLK
IOCSN
HALTN
SRSTN
ECK
RXD
IRON
CHS2
CHS0
CHS4
CHS3
FHNR
A12N
A11N#
A10N
A9N
A6N
A4N
A3N
A2N
A1N
A5N
D6N
D4N
D2N
D1N
D3N
D5N
D7N
D0
D1
D2
D3
D4
D5
D6
D7
D8
D9
D10
D11
D12
D13
D14
D15
A1
A2
A3
A4
A5
A6
A7
A8
A13
A16
A17
A18
A15
A9
A12
A11
A14
A10
Q601
Q602
Q603
Q604
Q5
Q6
Q7
Q8
Q9
Q11
Q13
Q607

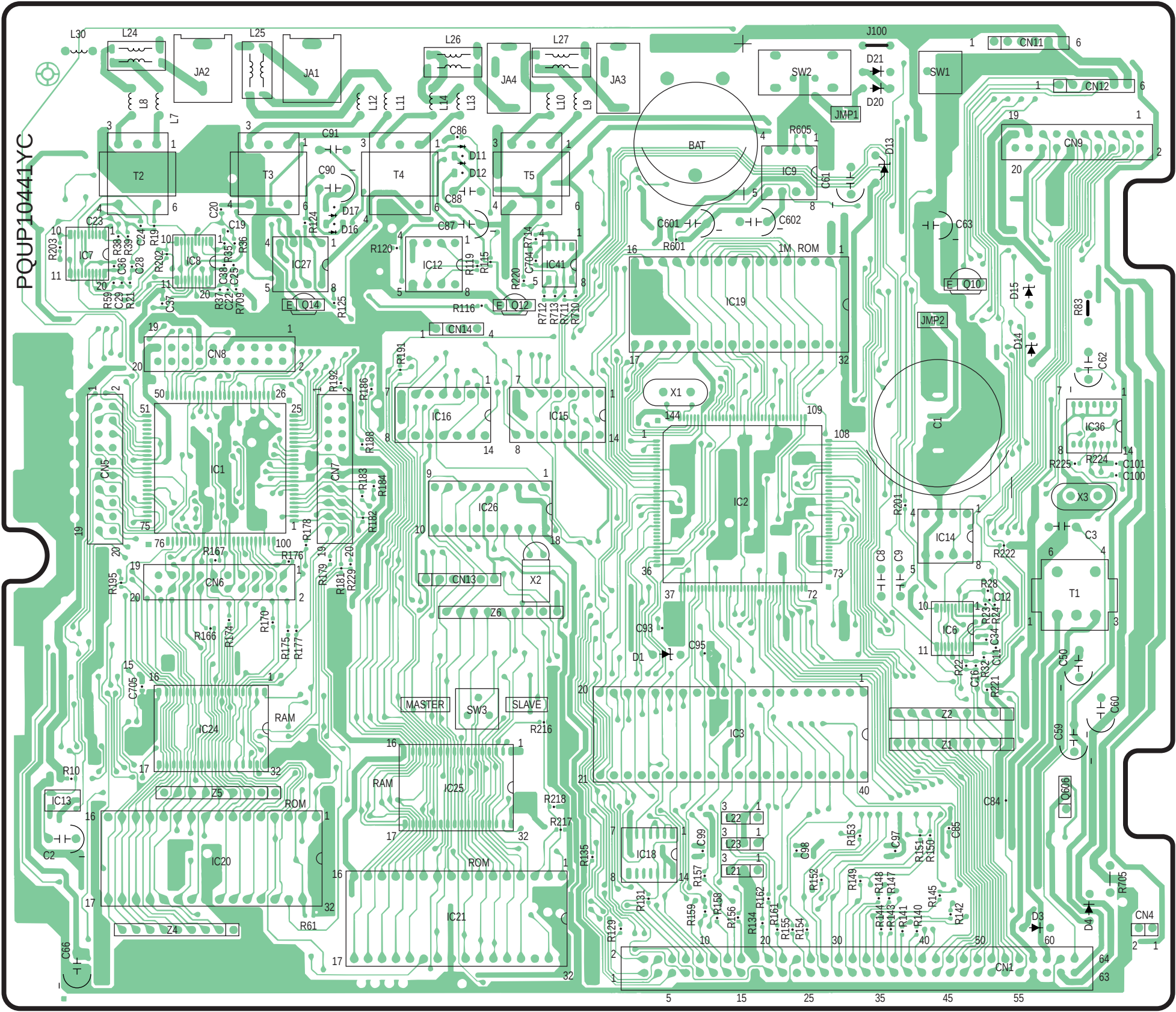
PQUP10441YC
L30
L24
L25
L26
L27
JA2
JA1
JA4
JA3
J100
SW2
SW1
CN11
CN12
D21
D20
JMP1
L8
L7
L12
L11
L14
L13
L10
L9
T2
T3
T4
T5
C91
C90
C86
D11
D12
C88
C87
D17
D16
BAT
R605
IC9
C61
D13
CN9
C23
C20
C19
R124
R120
IC7
IC8
IC27
IC12
IC41
R203
R38
R39
C24
R19
C36
C28
R202
R35
R36
C38
C25
R59
C29
R21
C37
R37
C22
R709
R125
R119
R115
R220
C704
R714
R116
Q14
Q12
R712
R713
R711
R710
C601
C602
R601
1M ROM
IC19
C63
Q10
D15
R83
JMP2
D14
C62
CN14
CN8
R191
R192
R186
IC16
IC15
X1
C1
IC36
R225
R224
C101
C100
CN5
IC1
CN7
R188
R183
R184
R182
IC26
IC2
R201
IC14
X3
C3
R222
R167
R176
R178
R179
R181
R229
CN6
R195
CN13
X2
Z6
C8
C9
R28
C12
T1
R166
R174
R170
R175
R177
C93
D1
C95
IC6
R23
R24
C34
C11
R22
C16
R32
R221
C50
C705
MASTER
SW3
SLAVE
R216
IC24
RAM
IC3
Z2
Z1
C60
C59
R10
IC13
Z5
ROM
RAM
IC25
R218
R217
C84
Q606
C2
IC20
ROM
IC21
R135
IC18
L22
L23
L21
C99
C98
R153
C97
R151
R150
C85
R157
R152
R149
R148
R147
R145
R131
R159
R158
R156
R134
R162
R161
R155
R154
R144
R143
R141
R140
R142
R705
D3
D4
CN4
R61
Z4
R129
C66
CN1

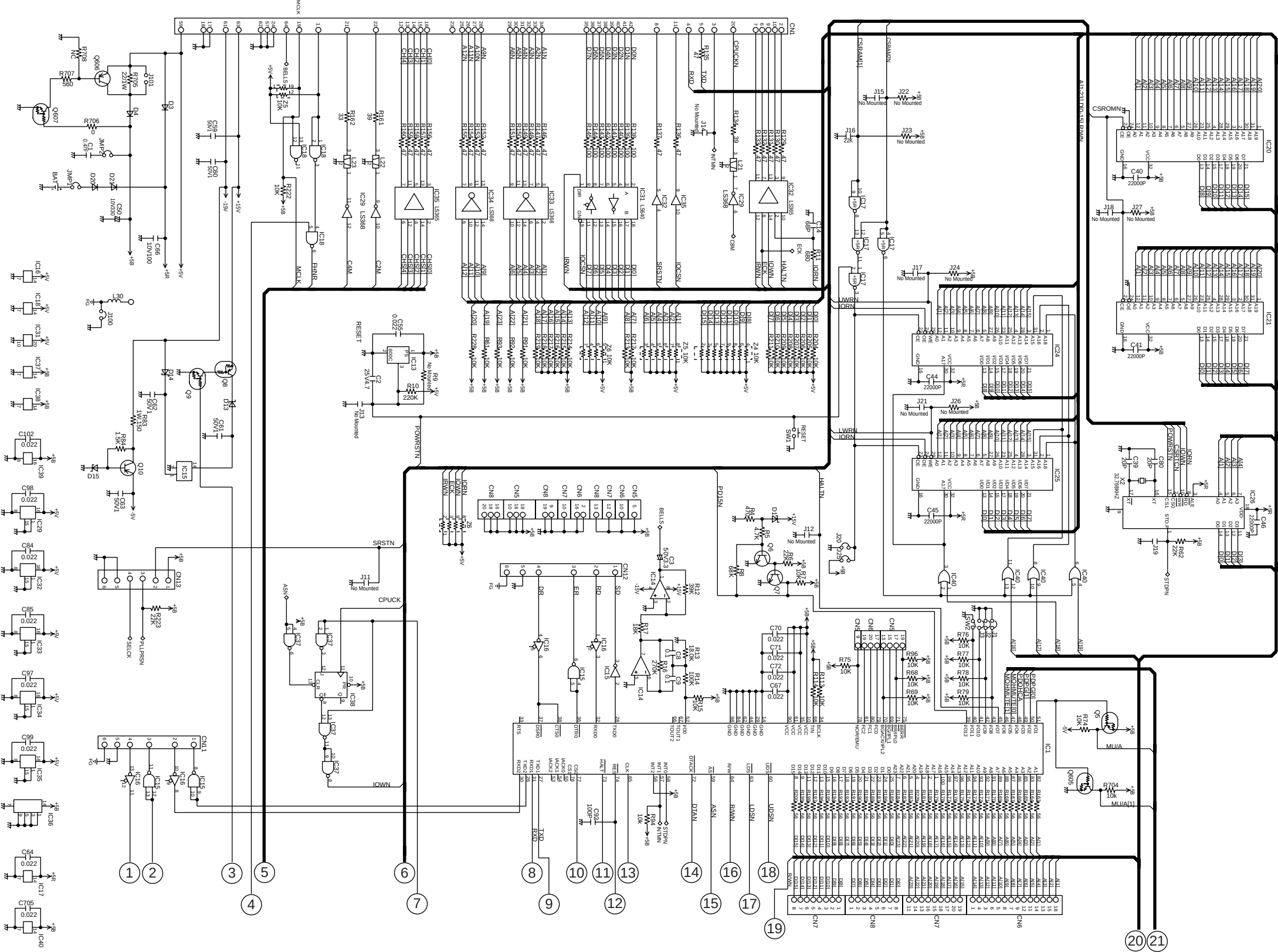

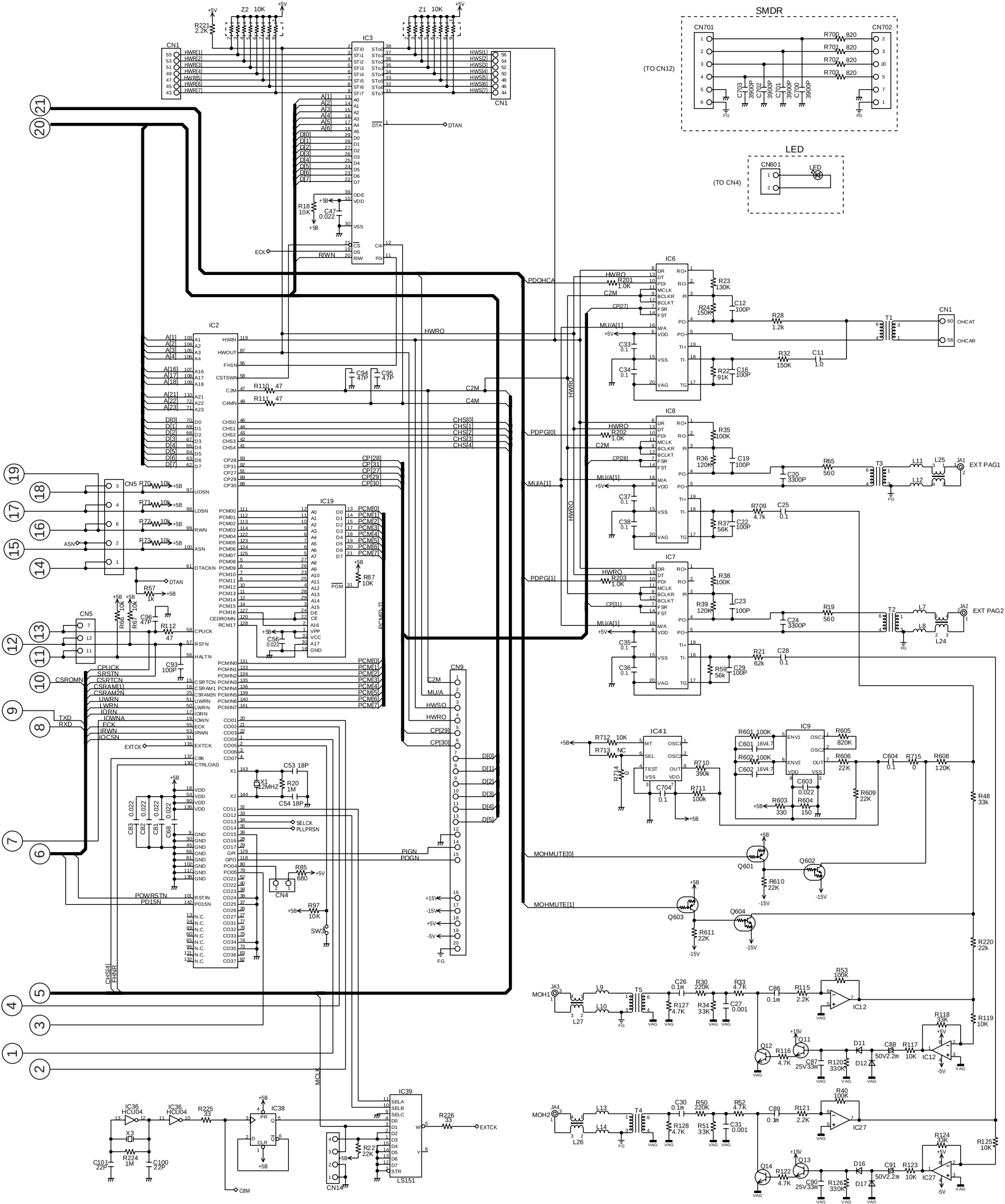
SMDR
CN701
CN702
(TO CN12)
R700 820
R701 820
R702 820
R703 820
C703 3900P
C702 3900P
C701 3900P
C700 3900P
FG
LED
CN601
LED
(TO CN4)
IC3
CN1
Z2 10K
Z1 10K
R221 2.2K
+5V
HWR[1]
HWR[2]
HWR[3]
HWR[4]
HWR[5]
HWR[6]
HWR[7]
HWS[1]
HWS[2]
HWS[3]
HWS[4]
HWS[5]
HWS[6]
HWS[7]
A[1]
A[2]
A[3]
A[4]
A[5]
A[6]
D[0]
D[1]
D[2]
D[3]
D[4]
D[5]
D[6]
D[7]
DTA
DTAN
R18 10K
C47 0.022
+5B
ECK
R/WN
IC2
IC6
IC8
IC7
IC19
IC41
IC9
IC12
IC27
IC36 HCU04
IC38
IC39
LS151
CN5
CN9
CN4
CN14
SW3
PDOHCA
PDPG[0]
PDPG[1]
MU/A[1]
HWRO
C2M
C4M
CHS[0]
CHS[1]
CHS[2]
CHS[3]
CHS[4]
CP[27]
CP[28]
CP[29]
CP[30]
CP[31]
PCM[0]
PCM[1]
PCM[2]
PCM[3]
PCM[4]
PCM[5]
PCM[6]
PCM[7]
PCM[0..7]
R23 130K
R24 150K
C12 100P
R28 1.2k
R32 150K
C11 1.0
R22 91K
C16 100P
R35 100K
R36 120K
C19 100P
R65 560
C20 3300P
R37 56K
C22 100P
R709 4.7K
C25 0.1
R38 100K
R39 120K
C23 100P
R19 560
C24 3300P
R21 62k
C28 0.1
R59 56K
C29 100P
T1
T2
T3
EXT PAG1
EXT PAG2
CN1
OHCAT
OHCAR
JA1
JA2
L11
L25
L12
L7
L8
L24
CPUCK
SRSTN
CSRTCN
CSRAM[1]
CSRAM2N
UWRN
LWRN
IORN
IOWNA
ECK
IRWN
IOCSN
EXTCK
CSROMN
TXD
RXD
POWRSTN
PD15N
C53 18P
X1 12MHZ
R20 1M
C54 18P
SELCK
PLLPRSN
R85 680
R97 10K
PIGN
POGN
MOHMUTE[0]
MOHMUTE[1]
Q601
Q602
Q603
Q604
R610 22K
R611 22K
R48 33k
R220 22k
R53 100K
R115 2.2K
R118 39K
R119 10K
R127 4.7K
R34 33K
C27 0.001
R30 220K
C26 0.1m
R33 4.7K
C86 0.1m
MOH1
L27
T5
Q12
Q11
R116 4.7K
D11
D12
C88 50V2.2m
R117 10K
C87 25V33m
R120 330K
R40 100K
R121 2.2K
R124 39K
R125 10K
R128 4.7K
R51 33K
C31 0.001
R50 220K
R52 4.7K
C30 0.1m
C89 0.1m
MOH2
L26
T4
Q14
Q13
R122 4.7K
D16
D17
C91 50V2.2m
R123 10K
C90 25V33m
R126 330K
R712 10K
R713 NC
R714 0
C704 0.1
R710 390K
R711 100K
C601 16V4.7
C602 16V4.7
C603 0.022
R601 100K
R602 100K
R603 330
R604 150
R605 820K
R606 22K
R609 22K
C604 0.1
R715 0
R608 120K
R712
R713
R714
R710
R711
R601
R602
R603
R604
R605
R606
R609
C601
C602
C603
C604
R715
R608
R48
R220
R53
R115
R118
R119
R127
R34
C27
R30
R33
C26
C86
R116
R117
R120
C87
C88
D11
D12
Q12
Q11
R40
R121
R124
R125
R128
R51
C31
R50
R52
C30
C89
R122
R123
C90
C91
D16
D17
Q14
Q13
R224 1M
C101 22P
C100 22P
X3
R225 33
R226 33
R227 22K
EXTCK
C8M
MCLK
CHS[4]
FHIN
R57 1K
R112 47
R110 47
R111 47
C93 100P
C96 47P
R66 10K
R67 10K
R70 10K
R71 10K
R72 10K
R73 10K
R87 10K
C56 0.022
C94 47P
C95 47P
C33 0.1
C34 0.1
C35 0.1
C36 0.1
C37 0.1
C38 0.1
C82 0.022
C81 0.022
C68 0.022
C83 0.022
+5V
+5B
-5V
-15V
FG
VAG

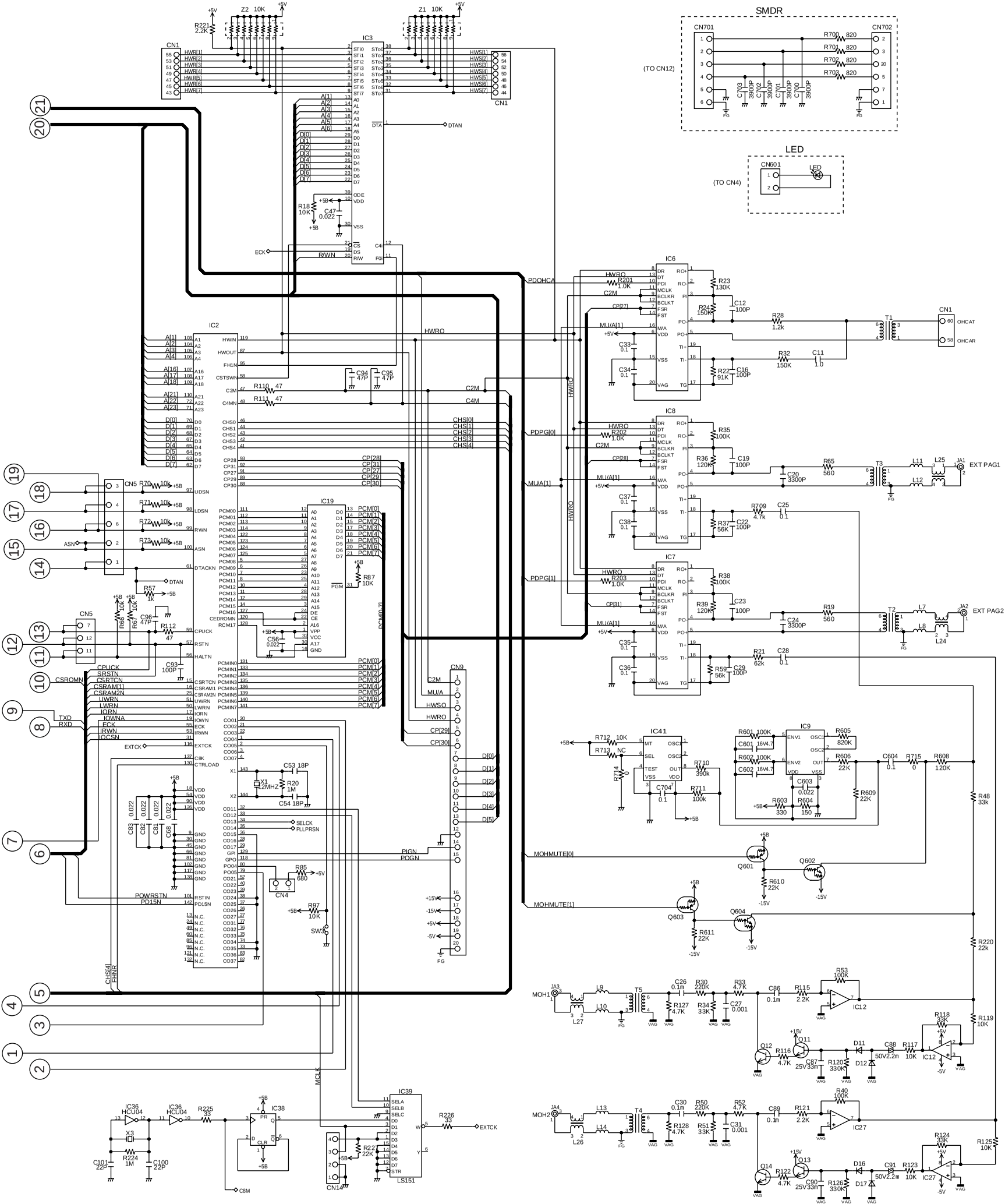
SMDR
CN701
CN702
(TO CN12)
R700 820
R701 820
R702 820
R703 820
C703 3900P
C702 3900P
C701 3900P
C700 3900P
FG
LED
CN601
LED
(TO CN4)
IC3
CN1
Z2 10K
Z1 10K
R221 2.2K
+5V
HWR[1]
HWR[2]
HWR[3]
HWR[4]
HWR[5]
HWR[6]
HWR[7]
HWS[1]
HWS[2]
HWS[3]
HWS[4]
HWS[5]
HWS[6]
HWS[7]
A[1]
A[2]
A[3]
A[4]
A[5]
A[6]
D[0]
D[1]
D[2]
D[3]
D[4]
D[5]
D[6]
D[7]
DTA
DTAN
R18 10K
C47 0.022
+5B
ECK
R/WN
IC2
IC6
IC8
IC7
IC19
IC41
IC9
IC12
IC27
IC36 HCU04
IC38
IC39
LS151
CN5
CN9
CN4
CN14
SW3
PDOHCA
PDPG[0]
PDPG[1]
MU/A[1]
HWRO
C2M
C4M
CHS[0]
CHS[1]
CHS[2]
CHS[3]
CHS[4]
CP[27]
CP[28]
CP[29]
CP[30]
CP[31]
PCM[0]
PCM[1]
PCM[2]
PCM[3]
PCM[4]
PCM[5]
PCM[6]
PCM[7]
PCM[0..7]
R23 130K
R24 150K
C12 100P
R28 1.2k
R32 150K
C11 1.0
R22 91K
C16 100P
R35 100K
R36 120K
C19 100P
R65 560
C20 3300P
R37 56K
C22 100P
R709 4.7K
C25 0.1
R38 100K
R39 120K
C23 100P
R19 560
C24 3300P
R21 62k
C28 0.1
R59 56K
C29 100P
T1
T2
T3
EXT PAG1
EXT PAG2
CN1
OHCAT
OHCAR
JA1
JA2
L11
L25
L12
L7
L8
L24
CPUCK
SRSTN
CSRTCN
CSRAM[1]
CSRAM2N
UWRN
LWRN
IORN
IOWNA
ECK
IRWN
IOCSN
EXTCK
CSROMN
TXD
RXD
POWRSTN
PD15N
C53 18P
X1 12MHZ
R20 1M
C54 18P
SELCK
PLLPRSN
R85 680
R97 10K
PIGN
POGN
MOHMUTE[0]
MOHMUTE[1]
Q601
Q602
Q603
Q604
R610 22K
R611 22K
R48 33k
R220 22k
R53 100K
R115 2.2K
R118 39K
R119 10K
R127 4.7K
R34 33K
C27 0.001
R30 220K
C26 0.1m
R33 4.7K
C86 0.1m
MOH1
L27
T5
Q12
Q11
R116 4.7K
D11
D12
C88 50V2.2m
R117 10K
C87 25V33m
R120 330K
R40 100K
R121 2.2K
R124 39K
R125 10K
R128 4.7K
R51 33K
C31 0.001
R50 220K
R52 4.7K
C30 0.1m
C89 0.1m
MOH2
L26
T4
Q14
Q13
R122 4.7K
D16
D17
C91 50V2.2m
R123 10K
C90 25V33m
R126 330K
R712 10K
R713 NC
R714 0
C704 0.1
R710 390K
R711 100K
C601 16V4.7
C602 16V4.7
C603 0.022
R601 100K
R602 100K
R603 330
R604 150
R605 820K
R606 22K
R609 22K
C604 0.1
R715 0
R608 120K
R712
R713
R714
R710
R711
R601
R602
R603
R604
R605
R606
R609
C601
C602
C603
C604
R715
R608
R48
R220
R53
R115
R118
R119
R127
R34
C27
R30
R33
C26
C86
R116
R117
R120
C87
C88
D11
D12
Q12
Q11
R40
R121
R124
R125
R128
R51
C31
R50
R52
C30
C89
R122
R123
C90
C91
D16
D17
Q14
Q13
R224 1M
C101 22P
C100 22P
X3
R225 33
R226 33
R227 22K
EXTCK
C8M
MCLK
CHS[4]
FHIN
R57 1K
R112 47
R110 47
R111 47
C93 100P
C96 47P
R66 10K
R67 10K
R70 10K
R71 10K
R72 10K
R73 10K
R87 10K
C56 0.022
C94 47P
C95 47P
C33 0.1
C34 0.1
C35 0.1
C36 0.1
C37 0.1
C38 0.1
C82 0.022
C81 0.022
C68 0.022
C83 0.022
+5V
+5B
-5V
-15V
FG
VAG

ORDER NO. KM493075820
F5

Service Manual

and Technical Guide

DIGITAL SUPER HYBRID SYSTEM

KX-TD1232C

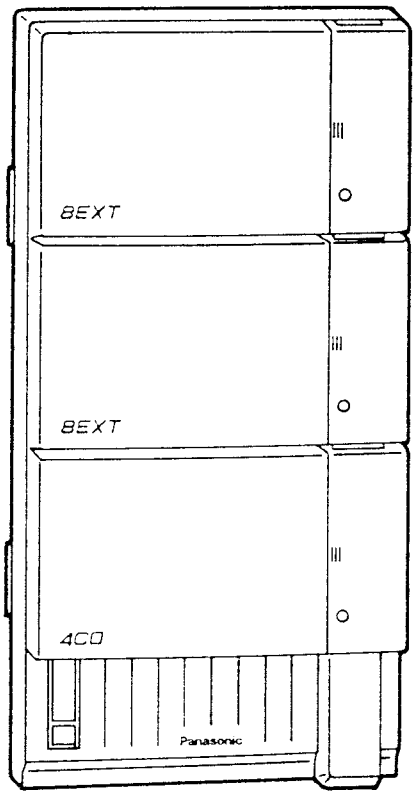

Panasonic

BX

TABLE OF CONTENTS (General)

FOR SERVICE TECHNICIANS....3
SAFETY PRECAUTIONS....3
INSTRUCTION RESISTANCE TEST....3
NOTE....3
SPECIFICATIONS....4
NAME AND LOCATION....5
CONNECTION....6, 7
DISASSEMBLY INSTRUCTIONS....8-11
CIRCUIT OPERATIONS....12-50
TROUBLE SHOOTING....51-62
DIAGNOSTIC METHOD....64, 65
HOW TO REPLACE FLAT PACKAGE IC....66
EXPLANATION OF CONNECTORS....67-72
PRINTED CIRCUIT BOARD....73-76, 83-86, 93-97, 99, 100-105, 106
SCHEMATIC DIAGRAM....77-82, 87-92, 97, 101-104
EXTENSION CABLE FOR SERVICING....109
CABINET AND ELECTRICAL PARTS LOCATION....110-112
ACCESSORIES AND PACKING MATERIALS....113
REPLACEMENT PARTS LIST....114-122

FOR SERVICE TECHNICIANS

ICs and LSIs are vulnerable to static electricity.
When repairing, the following precautions will help prevent recurring malfunctions.
- Cover plastic parts boxes with aluminum foil.
- Ground soldering irons.
- Use a conductive mat on worktable.
- Do not grasp IC or LSI pins with bare fingers.

SAFETY PRECAUTIONS

1. Before servicing, unplug the power cord to prevent an electric shock.
2. When replacing parts, use only manufacturer's recommended components of safety.
3. Check the condition of the power cord. Replace if wear or damage is evident.
4. After servicing, be sure to restore the lead dress, insulation barriers, insulation papers, shields, etc.
5. Before returning the serviced equipment to the customer, be sure to make the following insulation resistance test to prevent the customer from being exposed to a shock hazard.

INSULATION RESISTANCE TEST

1. Unplug the power cord and short the two prongs of the plug with a jumper wire.
2. Turn on the power switch.
3. Measure the resistance value with ohmmeter between the jumpered AC plug and each exposed metal cabinet part, such as screwheads, antenna, control shafts, handle brackets, etc. Equipment with antenna terminals should read between 3 MΩ and 5.2 MΩ to all exposed parts*. (Fig. 1) Equipment without antenna terminals should read approximately infinity to all exposed parts. (Fig. 2)
   ***Note:** Some exposed parts may be isolated from the chassis by design. These will read infinity.
4. If the measurement is outside the specified limits, there is a possibility of a shock hazard. The equipment should be repaired and rechecked before it is returned to the customer.

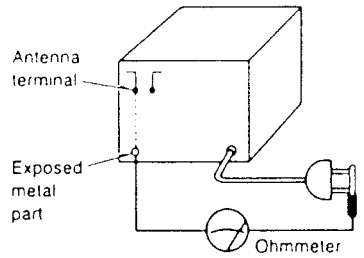

Fig. 1
Resistance = 3MΩ–5.2 MΩ

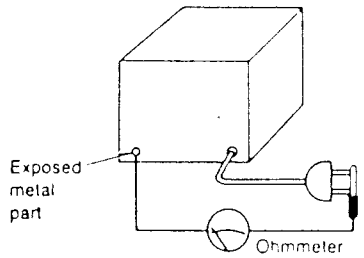

Fig. 2
Resistance = Approx ∞

NOTE

For details of installation, refer to the Installation Manual.

SPECIFICATIONS

This specifications is for CANADA version only.
Refer to this simplified manual (cover) for other areas.

General Description

1. Capacity	CO lines	12 max.
	Stations	32 max. (64 max. with XDP)
2. Control Method	Stored Program CPU: 16 bits CPU	
	Control ROM: 512 KB, Control RAM: 128 KB	
3. Switching	Non Blocking PCM Time Sharing Switch	
4. Power Supplies	Primary	120 V AC, 60 Hz
	Secondary	Station Supply Volt: 30 V, Circuit Volt: ±5 V, ±15 V
	Power Failure	
	•6 CO lines max. assigned to stations (Power Failure Transfer)	
	•System operation for several h urs by batteries (car batteries consisting of two 12 V DC) recommended	
5. Dialing	Outward	Dial Pulse 10PPS, 20PPS Tone (DTMF) Dialing
	Internal	Dial Pulse (DP) 10PPS, 20PPS Tone (DTMF) Dialing
	Mode Conversion	DP-DTMF, DTMF-DP
6. Intercom paths	4	
7. Connector	CO lines	Modular Jack (CA14A for KX-TD1232C)
	Station	Amphenol Connector
	Paging Output	Pin Jack (RCA JACK)
	External Music Input	Two-conductors Jack (MINI JACK 3.5 mm/9/64 inch diameter)
8. EXT Connection	Cable	1 pair wire (T, R) (Standard Telephones, KX-T7052) 2 pair wire (D1, D2 or T, R, D1, D2) (KX-T7220, KX-T7230, KX-T7235, KX-T7250, KX-T7240, KX-T7040) 2 pair wire (T, R, D1, D2) (KX-T7020, KX-T7030, KX-T7050, KX-T7055) 3 pair wire (T, R, D1, D2, P1, P2) (KX-T7130)
9. SMDR	Interface	EIA (RS-232C)
Station Message Detail Recording	Output Equipment	Printer
	Detail Recording	Date, Time, Ext. Number, CO Line Number, Dialed Number, Call Duration, Account Code
10. Dimensions	320 (W)×640 (H)×110 (D) mm	
11. Weight	7.8 kg	

Characteristics

1. Station Loop Limit	KX-T7220/KX-T7230/KX-T7235/ KX-T7250/KX-T7020/KX-T7030/ KX-T7050/KX-7055/KX-T7130	40 ohms
	Standard Telephone, KX-T7052	600 ohms including set
	Doorphone	20 ohms
2. Minimum Leak Resistance	15,000 ohms	
3. Maximum Number of Station Instruments per Line	1 (KX-T7220, KX-7230, KX-T7235, KX-T7250, KX-T7130, KX-T7020, KX-T7030, KX-T7050, KX-T7055, KX-T7052 or standard telephone) 2 (Parallelor Extra Device Port Connection of a proprietary telephone and a standard telephone)	
4. Ring Voltage	70 Vrms at 25 Hz depends on Ringing Load	
5. Primary Power	120 V AC, 60 Hz, 2 A maximum	
6. Central Office Loop Limit	1600 ohms maximum	
7. Environmental Requirements	0–40°C, 132–104°F, 10%–90%	
8. Hookswitch Hash Timing Range	204–1000 milliseconds	

Design and specifications are subject to change without notice.

NAME AND LOCATION

Overview of the Main Unit

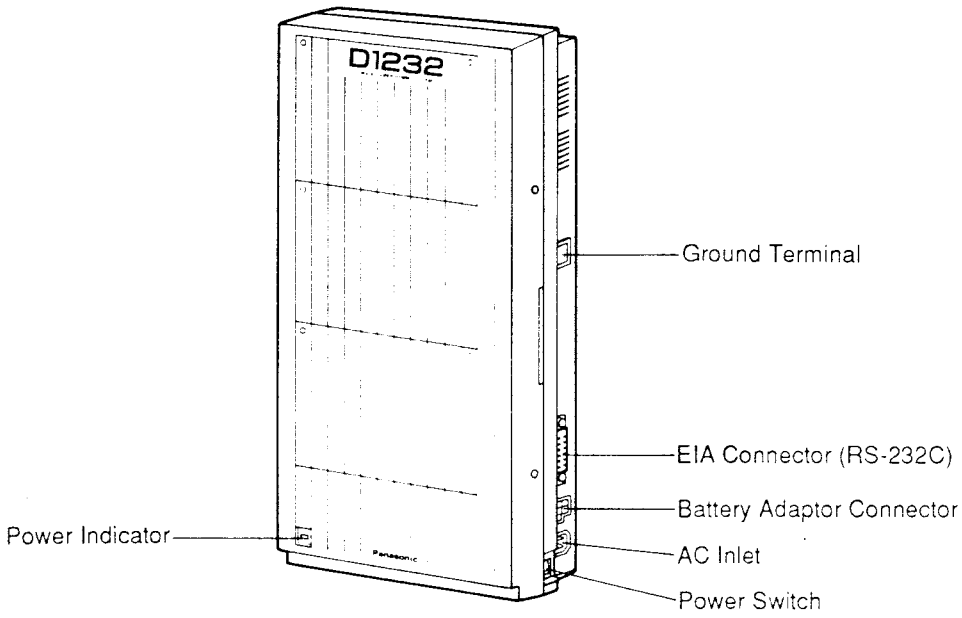

Inside View of the Main Unit

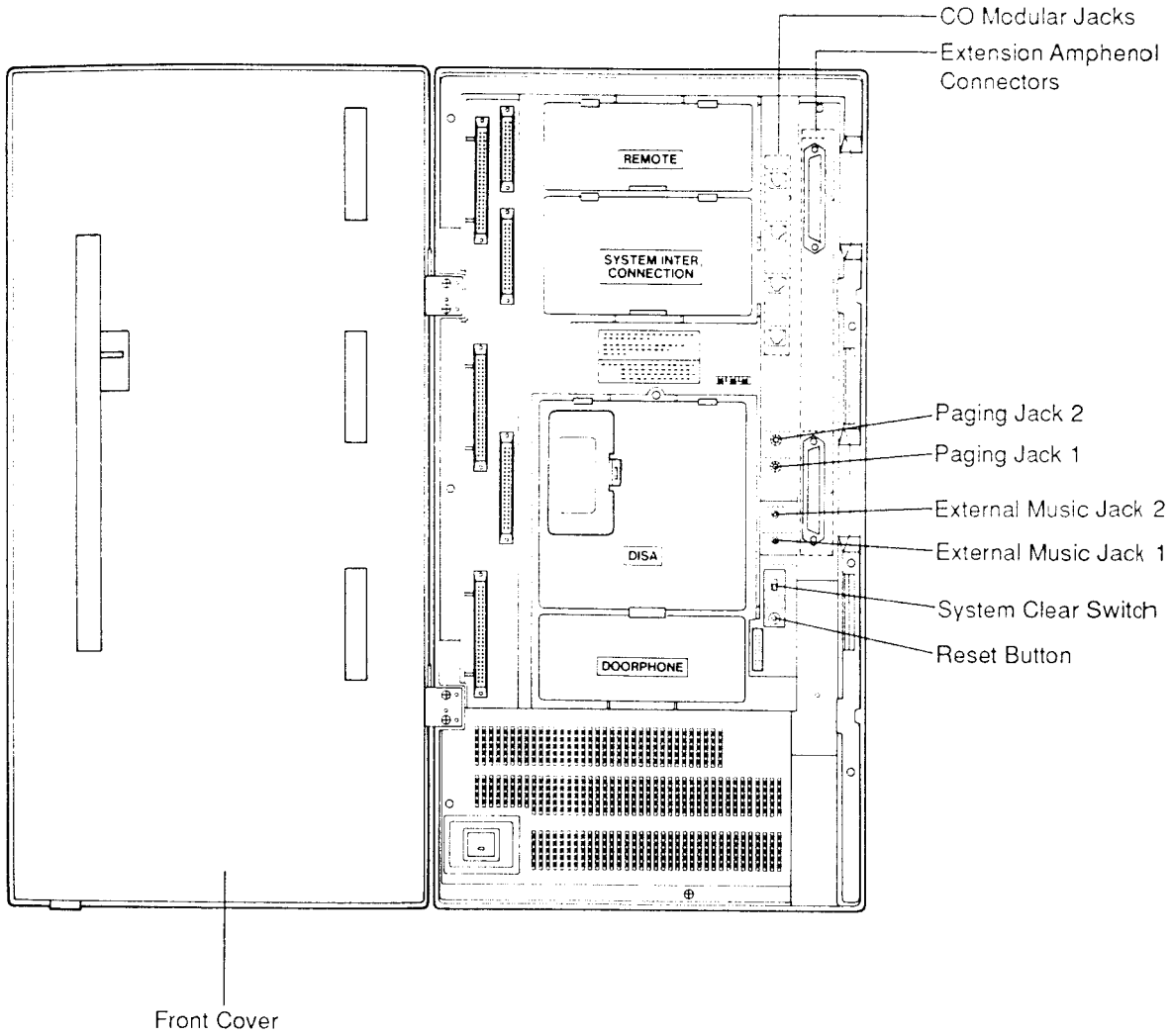

CONNECTION

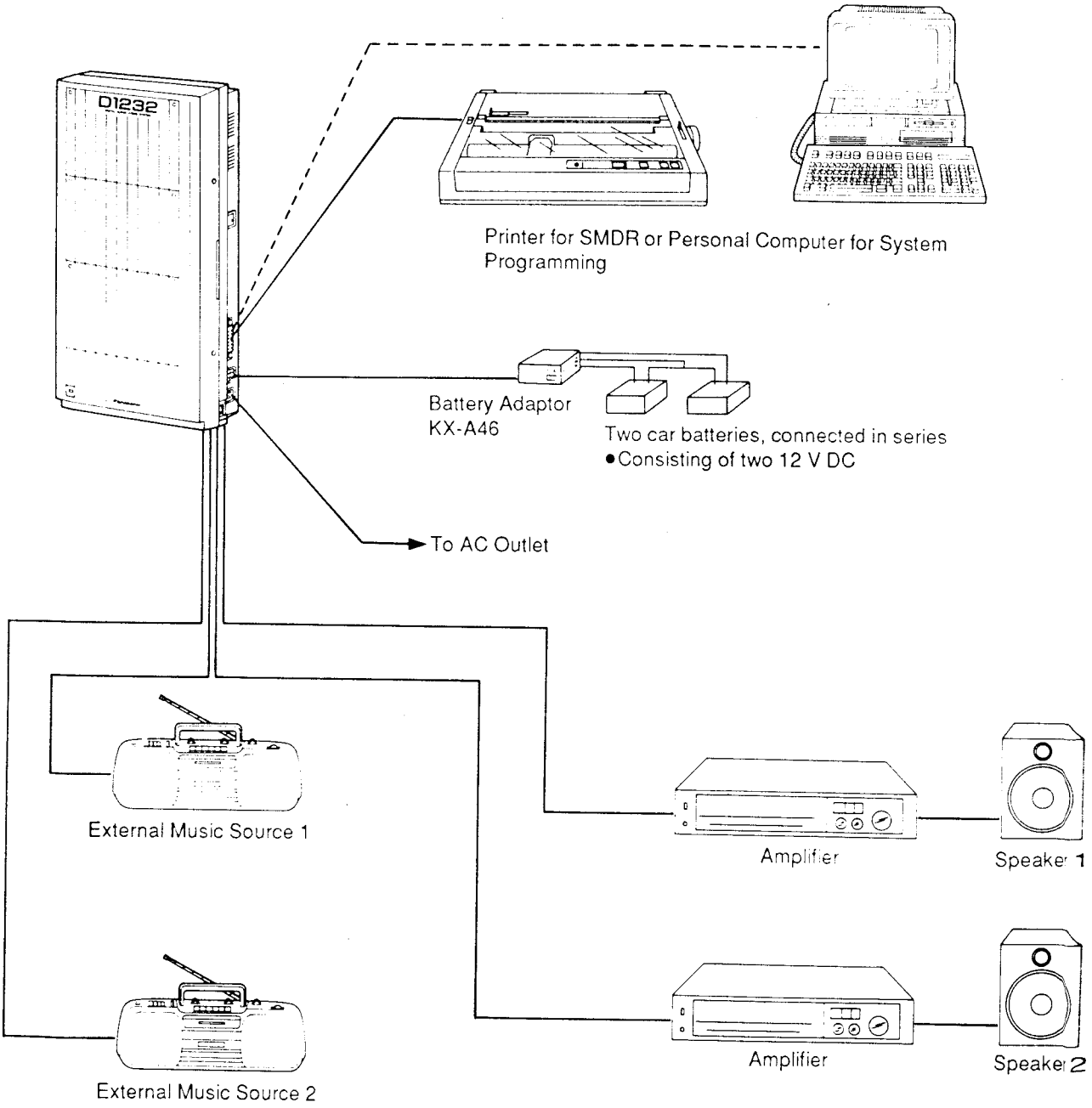
D1232
Printer for SMDR or Personal Computer for System Programming
Battery Adaptor
KX-A46
Two car batteries, connected in series
• Consisting of two 12 V DC
To AC Outlet
External Music Source 1
Amplifier
Speaker 1
External Music Source 2
Amplifier
Speaker 2

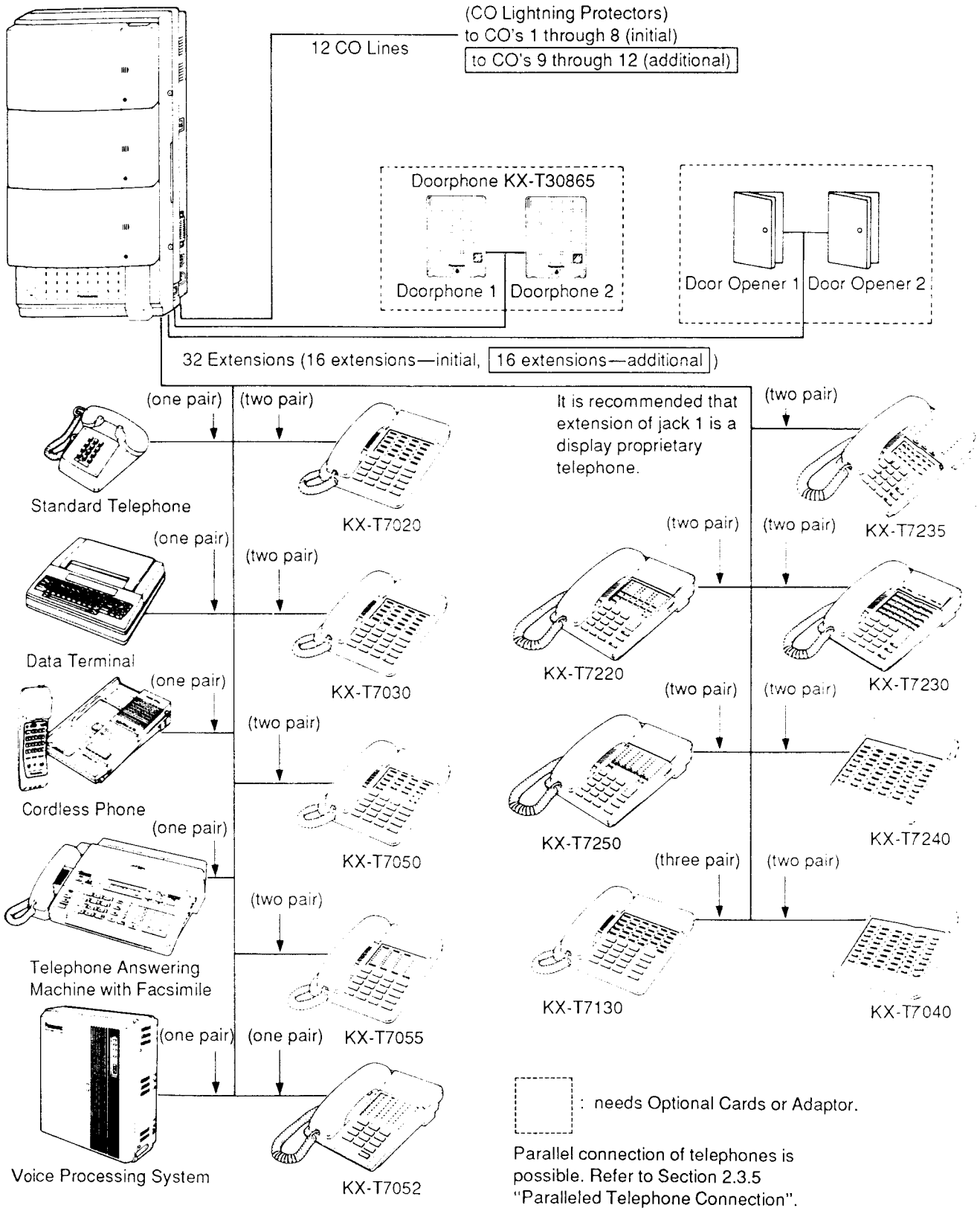
(CO Lightning Protectors)
to CO's 1 through 8 (initial)
to CO's 9 through 12 (additional)
12 CO Lines
Doorphone KX-T30865
Doorphone 1
Doorphone 2
Door Opener 1
Door Opener 2
32 Extensions (16 extensions—initial, 16 extensions—additional)
(one pair)
(two pair)
Standard Telephone
KX-T7020
Data Terminal
KX-T7030
Cordless Phone
KX-T7050
Telephone Answering Machine with Facsimile
KX-T7055
Voice Processing System
KX-T7052
It is recommended that extension of jack 1 is a display proprietary telephone.
KX-T7235
KX-T7220
KX-T7230
KX-T7250
KX-T7240
(three pair)
KX-T7130
KX-T7040
: needs Optional Cards or Adaptor.
Parallel connection of telephones is possible. Refer to Section 2.3.5 "Paralleled Telephone Connection".

DISASSEMBLY INSTRUCTIONS

Ref. No. 1	HOW TO REMOVE THE TOP COVER

Procedure 1

1. Loosen the two screws (A).
2. Open the top cover.
3. Slide the top cover in the direction of the arrow when removing it.

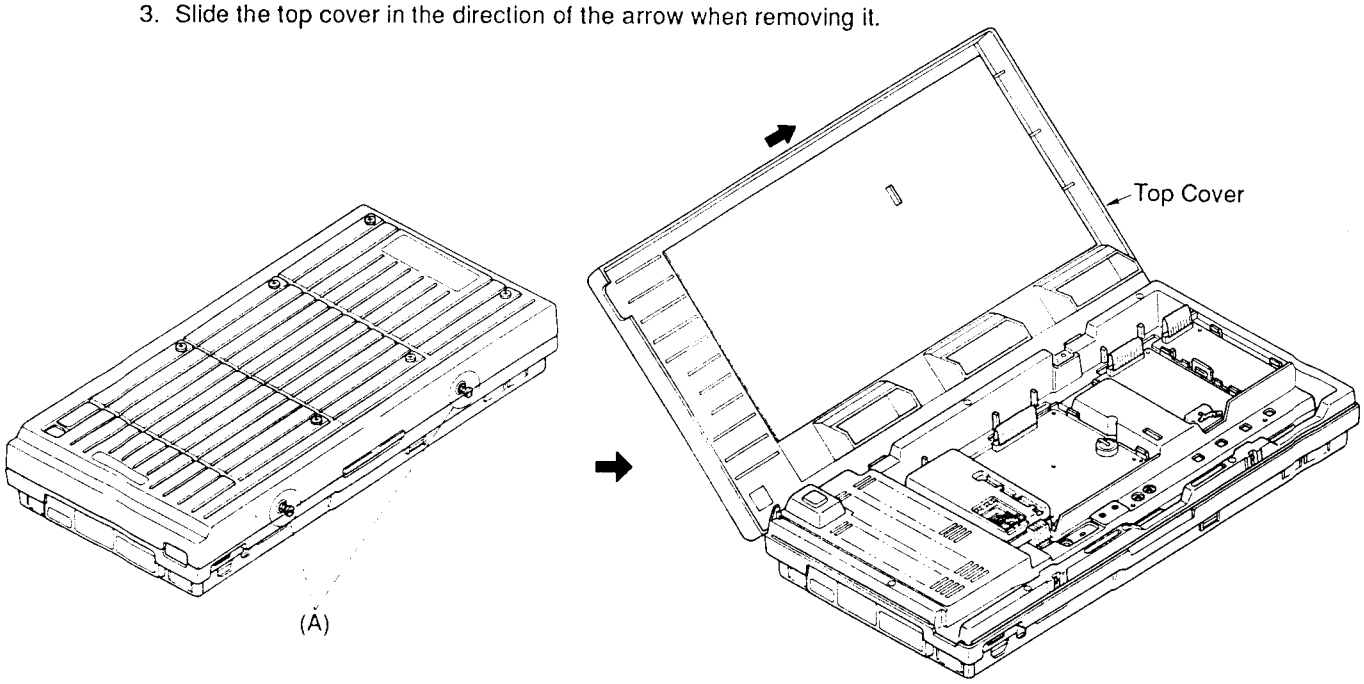

Ref. No. 2	HOW TO REMOVE THE INSIDE COVER

Procedure 1 → 2

1. Remove the option boards.
2. Remove the nine screws (A).
3. Remove the inside cover.

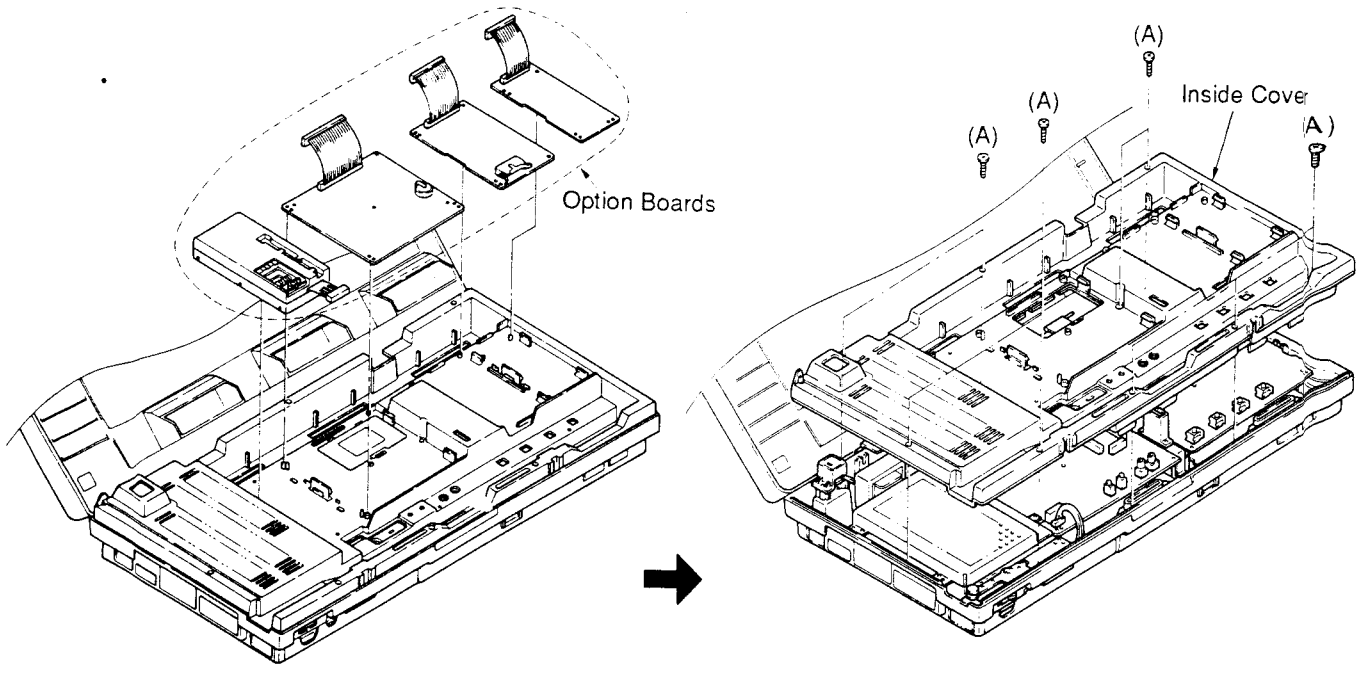

Ref. No. 3	HOW TO REMOVE THE CPU AND CO LINE BOARDS

Procedure
1 → 2 → 3

(CPU Board)

1. Remove the five screws (A).
2. Remove the three connectors.
3. Remove the CPU Board.

(CO LINE Board)

1. Remove the five screws (B).
2. Remove the one connector.
3. Remove the CO Line Board.

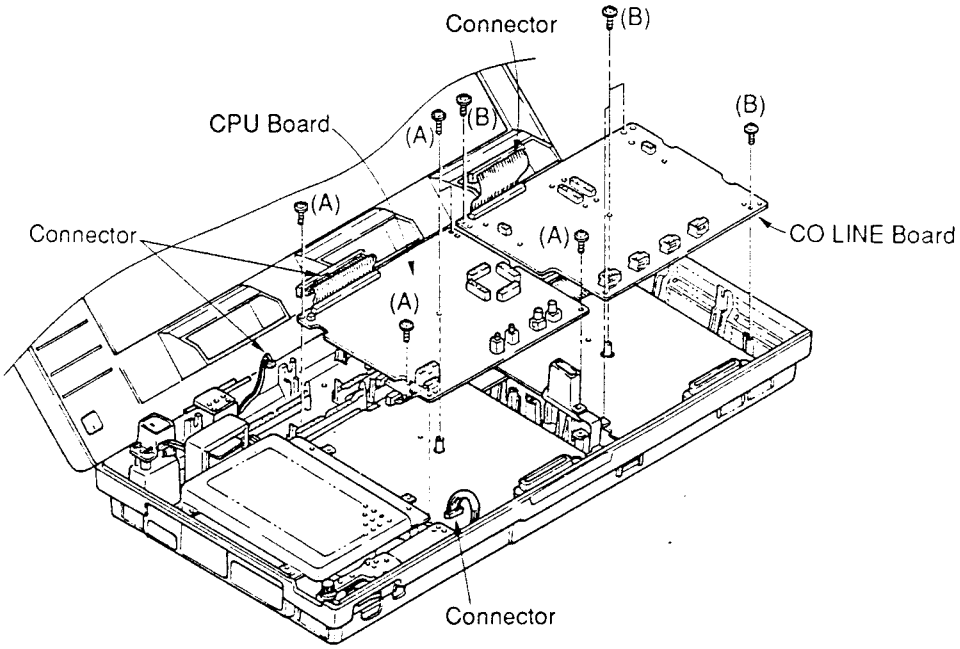

Ref. No. 4	HOW TO REMOVE THE EXTENSION BOARD

Procedure
1 → 2 → 3 → 4

1. Remove the five screws (A) or (B).
2. Remove the one connector (A) or (B).
3. Remove the Extension Board.

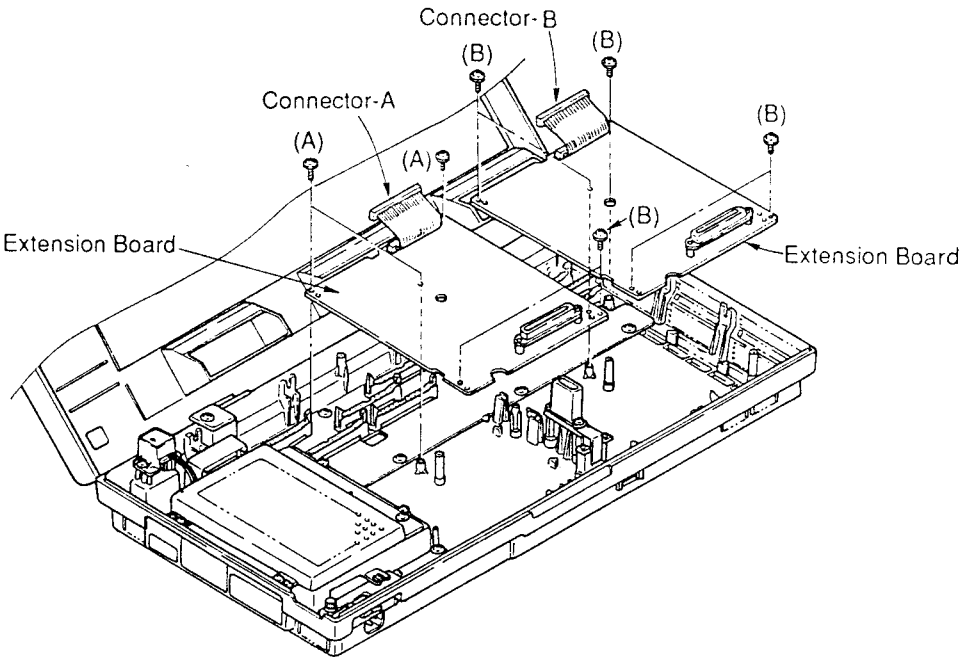

Ref. No. 5	HOW TO REMOVE THE **MOTHER BOARD**
Procedure 1 → 2 → 3 → 4 → 5	1. Remove the seven screws (A). 2. Remove the one connector. 3. Remove the mother board.

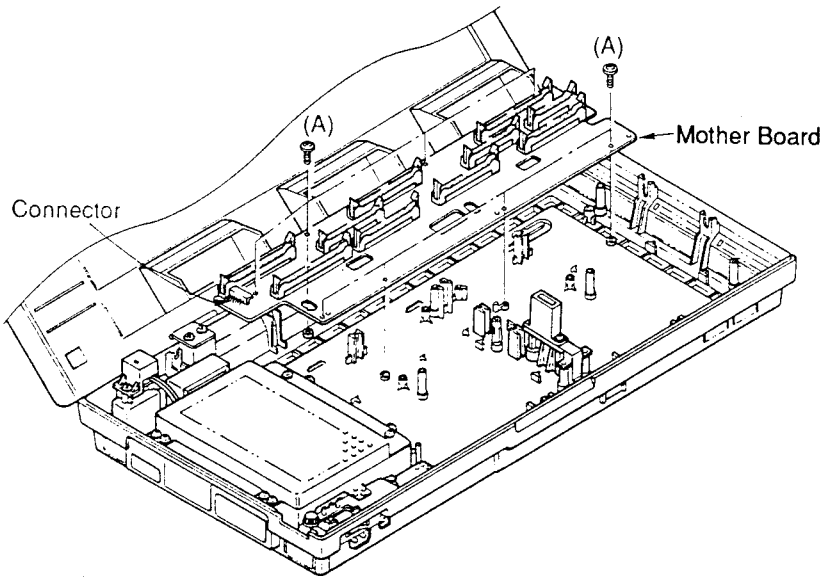

Ref. No. 6	HOW TO REMOVE THE POWER SUPPLY UNIT
Procedure 1 → 2 → 6	1. Remove the four screws (A). 2. Remove the three screws (B). 3. Remove the two connectors. 4. Remove the Power Supply Unit.

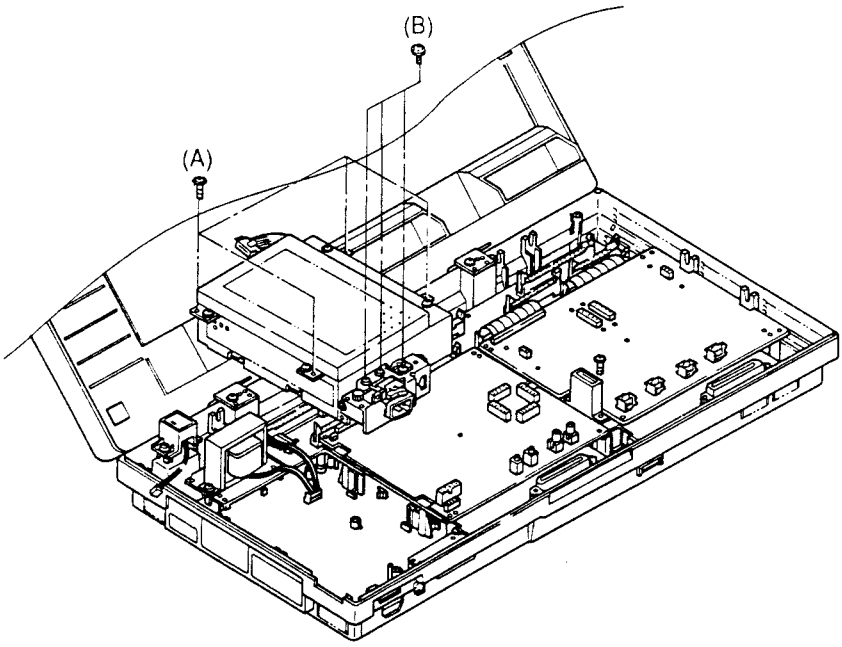

Ref. No. 7	HOW TO REMOVE THE POWER SUPPLY BOARD
Procedure 1 → 2 → 6 → 7	1. Remove the four screws (A). 2. Remove the shield cover. 3. Remove the four screws (B). 4. Remove the Power Supply Board.

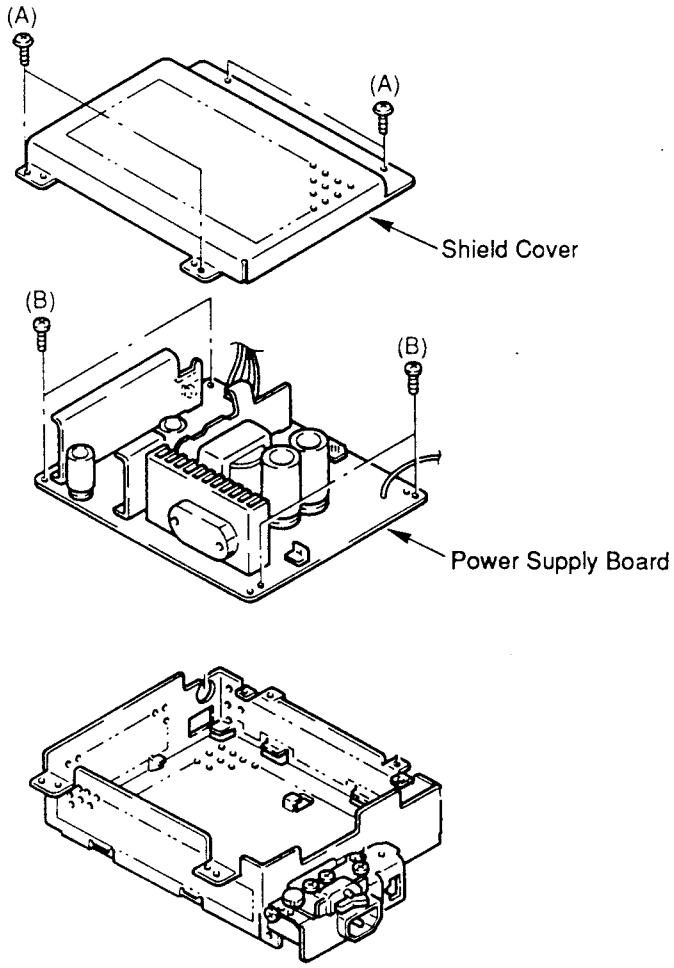

CIRCUIT OPERATIONS

1. GENERAL DESCRIPTION

1-1. OUTLINE 13
1-2. OUTLINE OF SPECIFICATIONS 14
1-3. ARTICLES 15, 16
1-4. BLOCK DIAGRAM ..... 17~24
1) GENERAL BLOCK DIAGRAM 17, 18
2) SYSTEM DIAGRAM OF PCM HIGHWAY 21
3) SYSTEM DIAGRAM OF PCM CLOCK 22
4) SYSTEM DIAGRAM OF ANALOGUE LINE 23
5) SYSTEM DIAGRAM OF POWER SUPPLY 24
1-5. CONTENTS 25, 26

2. FUNCTION OF EACH UNIT

2-1. BASIC ..... 27~29
1) POWER SUPPLY UNIT 27
2) CPU CARD 27
3) BASIC CO CARD 28
4) BASIC EXT CARD 28
5) MOTHER BOARD 29
6) LED BOARD 29
7) SMDR BOARD 29
2-2. RESOURCE OF OPTION 29, 30
1) EXPANSION CO CARD 29
2) EXPANSION EXT CARD 29
3) DOOR-PHONE CARD 29
4) REMOTE CARD 29
5) DISA (DIRECT INWARD SYSTEM ACCESS) CARD 30
6) SYSTEM INTERCONNECTION CARD 30
7) CALLER ID CARD 30
8) BATTERY BACKUP ADAPTER 30

3. EXPLANATION OF CIRCUIT OPERATION

3-1. BASIC ..... 31~40
1) POWER SUPPLY UNIT ..... 31~32
2) CPU CARD ..... 33~36
3) BASIC CO CARD 36, 37
4) BASIC EXT CARD ..... 38~40
3-2. RESOURCE OF OPTION ..... 41~50
1) EXTENSION CO CARD 41
2) EXTENSION EXT CARD 41
3) DOOR-PHONE CARD 41, 42
4) REMOTE CARD 42, 43
5) DISA CARD ..... 44~48
6) SYSTEM INTERCONNECTION CARD 49
7) CALLER ID CARD 50

1. GENERAL DESCRIPTION

1-1. OUTLINE

This equipment is a telephone exchange on the premise constructed with basic (KX-TD1232).
Basic contains controlling section and time-sharing switch section.

The features of this system are as follows;

(1) Super hybrid system

By one sort of a board, this system covers the single line telephones (SLT), the analogue type of the proprietary integrated telephone system (APITS) and the digital type of the proprietary integrated telephone system (DPITS) at the extnsion (EXT) ports.

(2) Parallel station

A SLT and a APITS can be connected parallely at each extension port. They can be used parallely as a mother phone and a daughter one.

(3) Extra Device Port (XDP)

A SLT and a DPITS can be connected parallely at each extension port. They can be used independently as individual phones.

(4) This system supports a new type of DPITS which is equipped a large LCD.

(5) Self-diagnostic function

It can find out the hardware trouble in the controllers and the circuit lines.

(6) Connection between another system

This system can be connected with another system by using an optional SIC CARD. They can be operated as a 2464 system.

1-2. OUTLINE OF SPECIFICATIONS

ITEMS	SPECIFICATIONS
Control systme	Stored program system
Call systme	Non blocking PCM TSS system
Exchange system	T1 (Time switch only)
Redundancy structure	Non multiplex, simplex
Modulation system	μ Law/A Law (both), PCM 8 bits 8 kHz sampling
CPU	CPU 68301 (8.192 MHz) No sub-processor on CO/EXT CARDs
Max. number of CO lines	12 lines (8 lines as standard)
Max. number of EXT lines	32 lines (16 lines as standard) XDP function allows to connect 64 terminals.
Max. number of connectable DSS console	4 units connect at EXT ports
Max. number of connectable Door-phone	2 units use optional card
Max. number of connectable system	2 units, 30 call channels use optional card
DISA simultaneous functional lines	2 lines use optional card
MODEM ports	1 port use optional card
Conference lines	3 persons×6 conferences
External paging ports	2 ports
External holding sound sources ports	2 ports
Internal holding sound sources	1, no available for USA and Canada
RS-232C ports	1 port, asynchronous 300–9600 bps (full duplex)
Door-opener control outputs	2 channels, attached with a Door-phone card, optional
OHCA lines	1 path

ITEMS		SPECIFICATIONS	
DTMF generator		2 channels (System employs common resources)	
Back-up lines (Transfer lines when power fails)		4 lines for a basic system, 6 lines for a expansion system	
Type of terminal, wiring system and line impedance		•SLT	2 (T,R) 600Ω or less (inc. TEL impedance)
		•APITS	4 (T, R, H, L) 40Ω or less
		•APITS with OHCA	6 (T, R, H, L, 3P, 3P) 40Ω or less
		•A.DSS console	2 (H, L) 40Ω or less
		•DPITS	2 (H, L) 40Ω or less
Options	•4-CO line card (EXPANSION CO CARD)		1 unit/system
	•8-EXT line card (EXPANSION EXT CARD)		2 unit/system
	•Door-phone card (DOOR-PHONE CARD)	2 terminals 2 door-opener control	1 unit/system
	•System Interconnection Card (SIC card)		1 unit/system
	•Modem card (REMOTE CARD)	300/1200/2400 bps asynchronous	1 unit/system
	•DISA card (DISA CARD)	2 channels Message memory 32 sec.×2	1 unit/system
	•Caller ID card (CALLER ID CARD)	4 channels	3 unit/system
	BASIC CO CARD can be installed with 2 units. EXPANSION CO CARD can be installed another 1 unit.		

1-3. ARTICLES

Unit structure and function are outlined in this section.

CLASS	UNIT NAME	PRODUCT CODE	QTY	OTHERS
BASIC	POWER SUPPLY UNIT	KX-TD1232	1	
	MOTHER CARD	KX-TD1232	1	
	CPU CARD	KX-TD1232	1	CPU, TSW, CONF
	CO CARD (BASIC)	KX-TD1232	1	8 CO LINES/BOARD
	EXT CARD (BASIC)	KX-TD1232	2	8 EXT LINES/BOARD
	LED BOARD	KX-TD1232	1	
	SMDR BOARD	KX-TD1232	1	
OPTION	EXPANSION CO CARD	KX-TD180	1	4 CO LINES/BOARD
	EXPANSION EXT CARD	KX-TD170	2 Max.	8 EXT LINES/BOARD
	DOOR-PHONE CARD	KX-TD160	1	
	SIC CARD	KX-TD192	1	EXP I/F
	REMOTE CARD	KX-TD196	1	
	DISA CARD	KX-TD191	1	
	CALLER ID CARD	KX-TD193	3 Max.	ONLY FOR USA/CND MARKET
	BATTERY BACK-UP ADAPTER	KX-A46	1	

1-4. BLOCK DIAGRAM

1) GENERAL BLOCK DIAGRAM

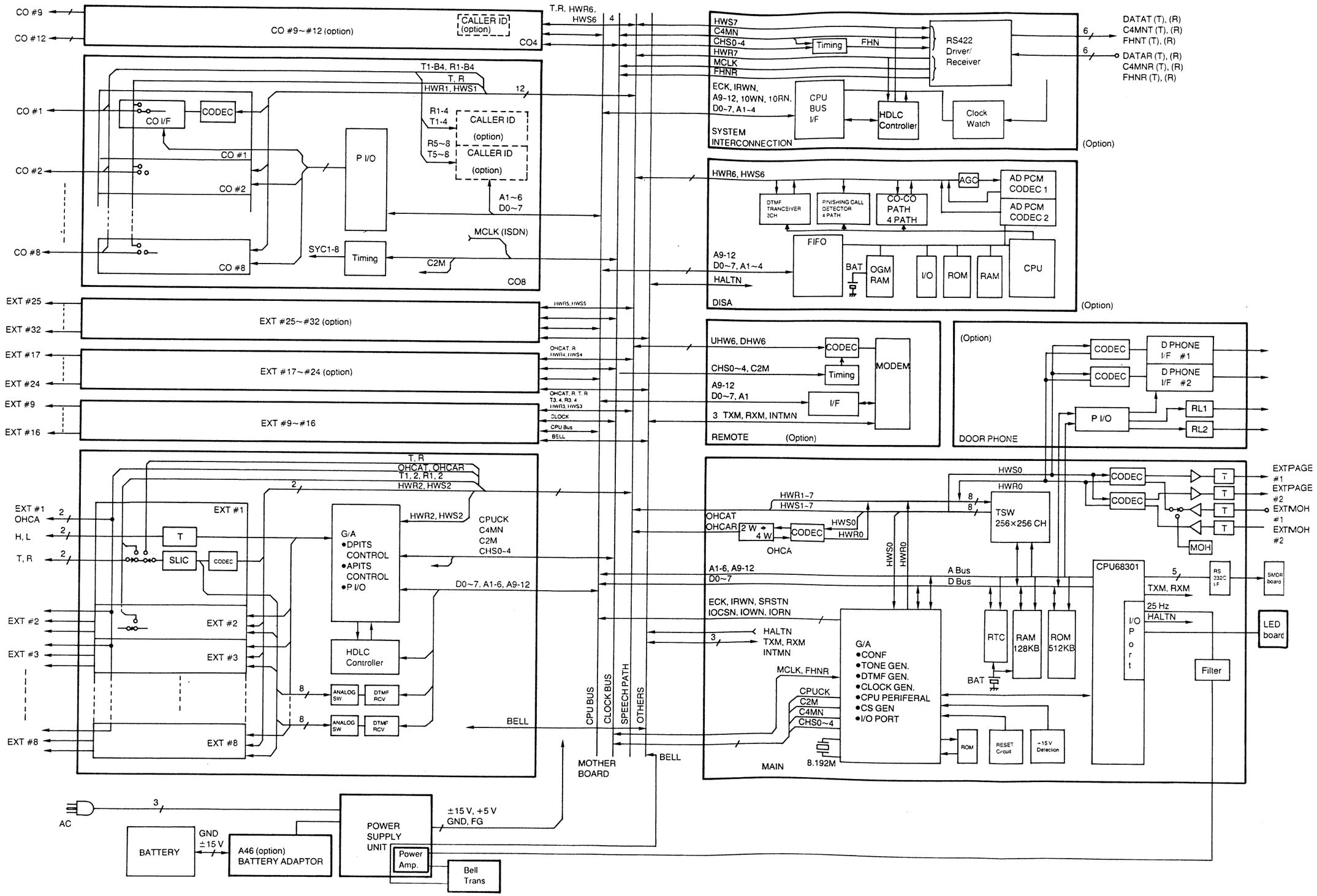

MEMO

MEMO

2) SYSTEM DIAGRAM OF PCM HIGHWAY

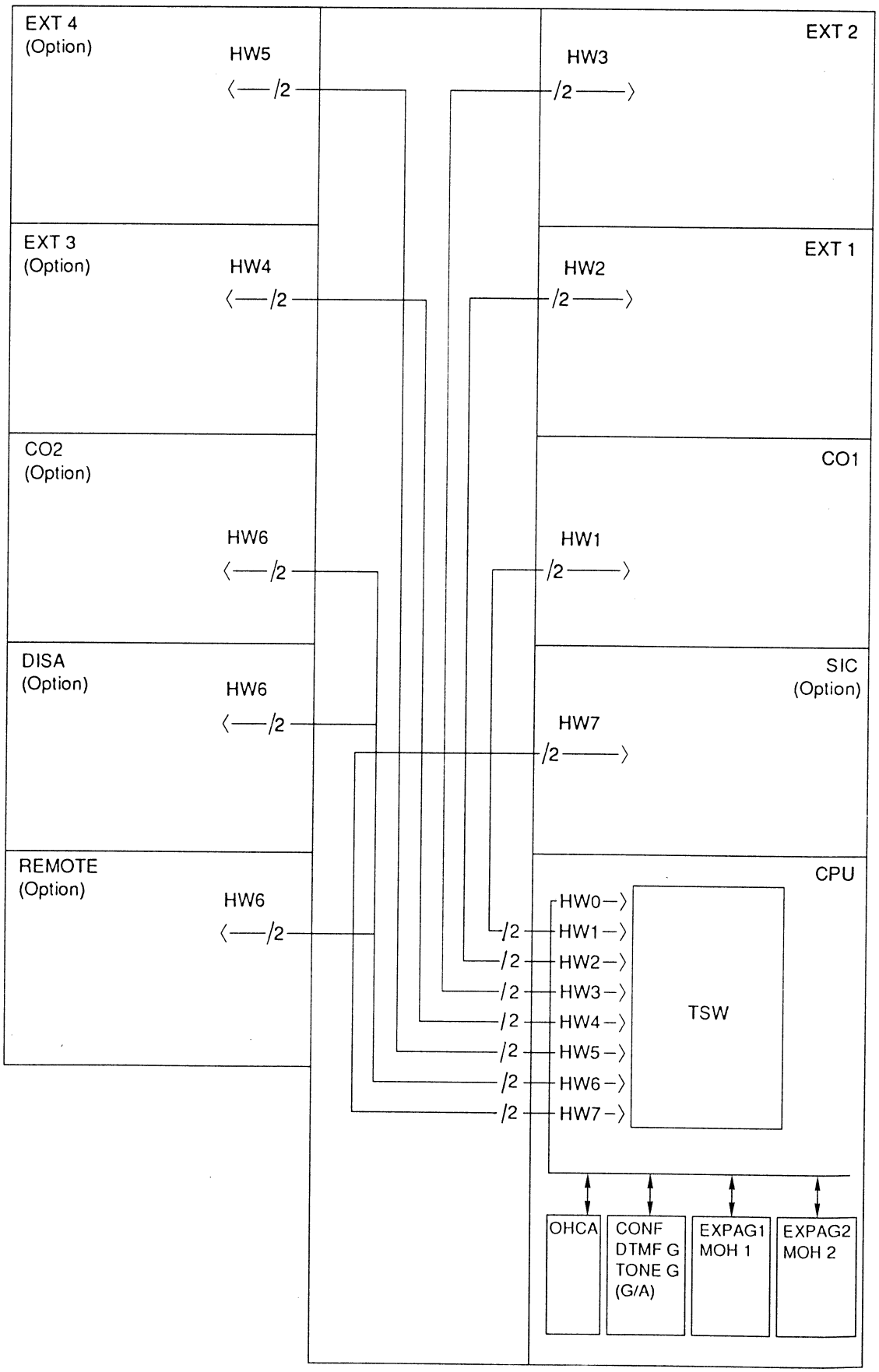

3) SYSTEM DIAGRAM OF PCM-CLOCK

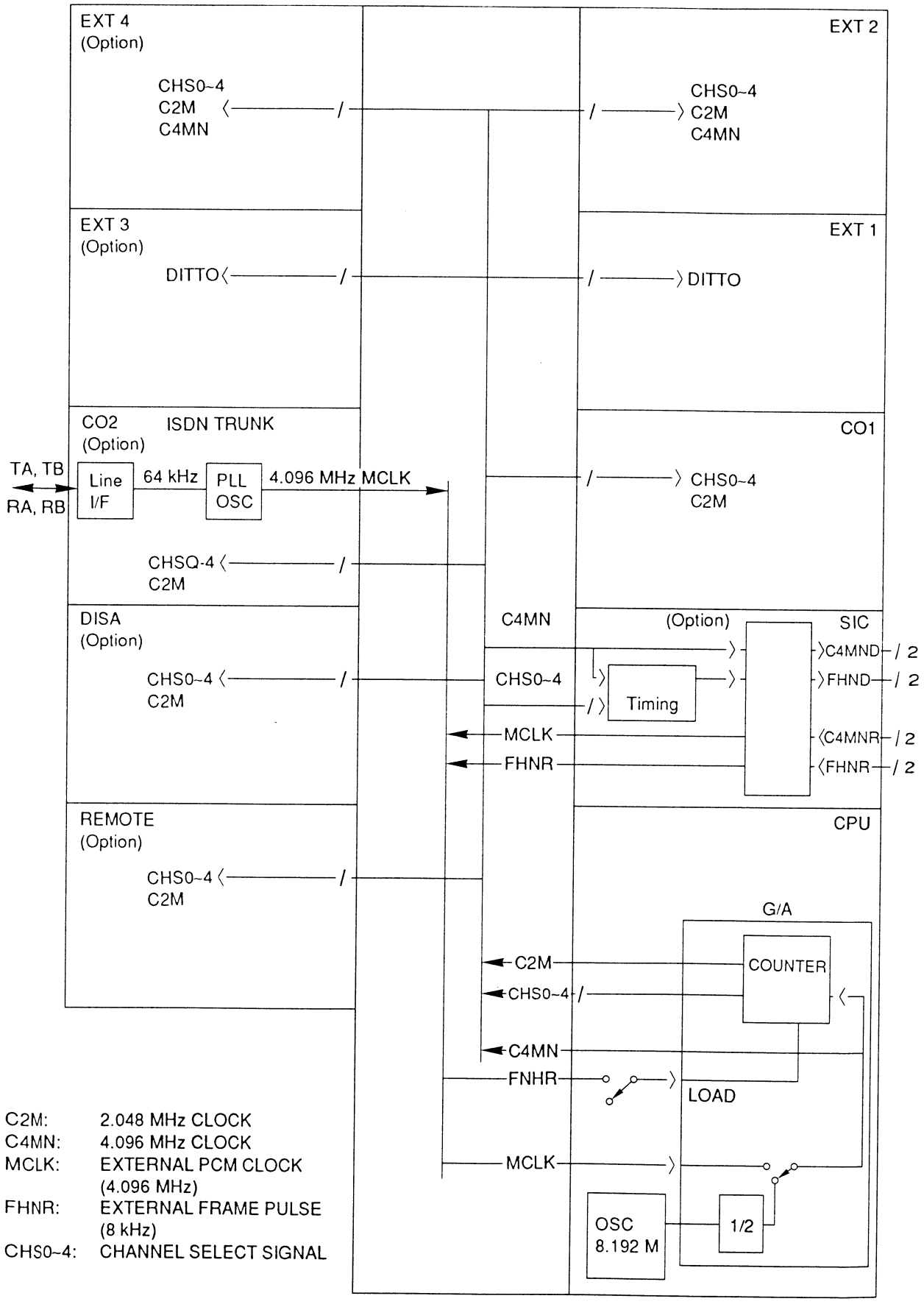

C2M: 2.048 MHz CLOCK
C4MN: 4.096 MHz CLOCK
MCLK: EXTERNAL PCM CLOCK (4.096 MHz)
FHNR: EXTERNAL FRAME PULSE (8 kHz)
CHS0~4: CHANNEL SELECT SIGNAL

4) SYSTEM DIAGRAM OF ANALOGUE LINE

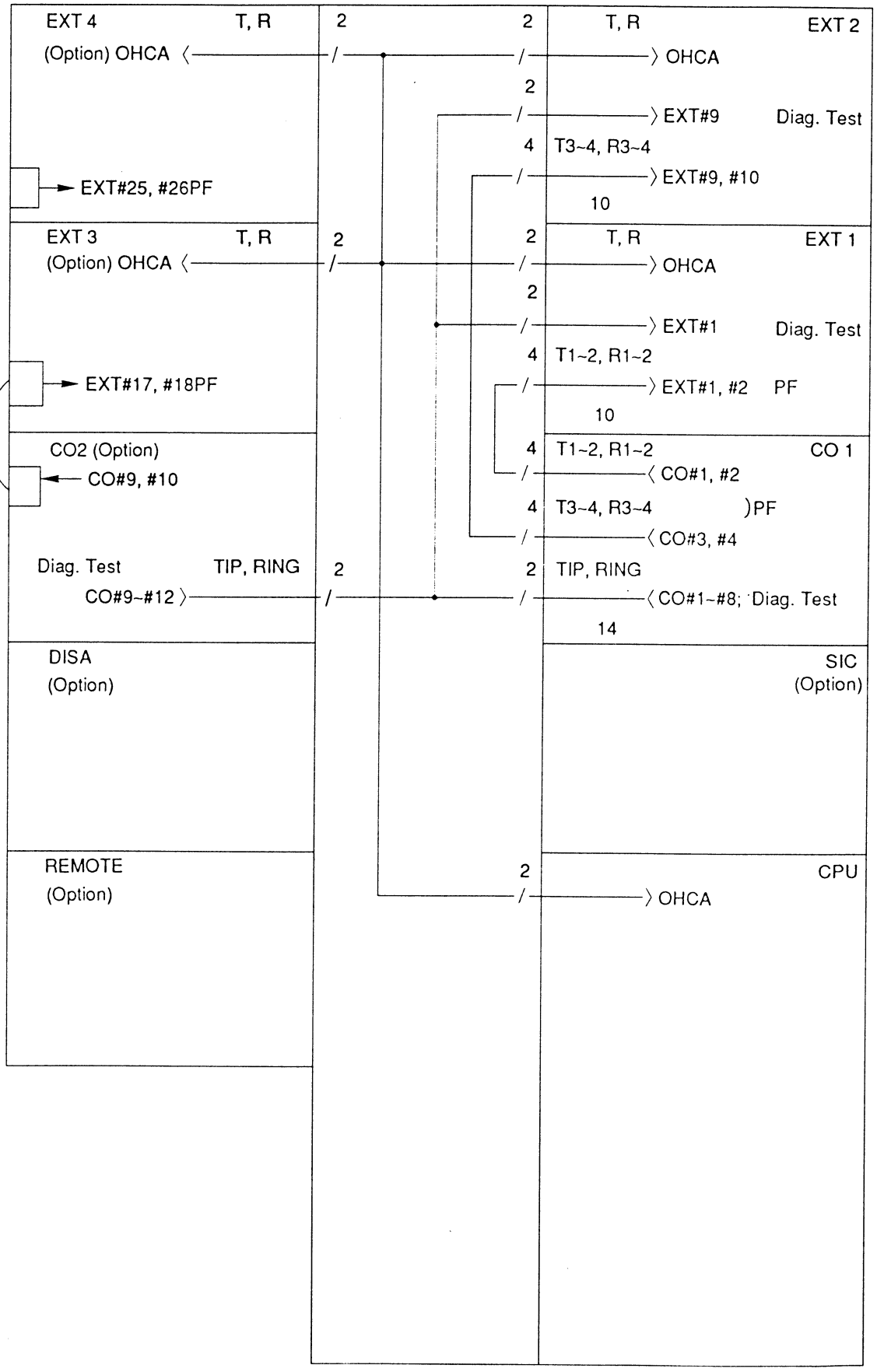

5) SYSTEM DIAGRAM OF POWER SUPPLY

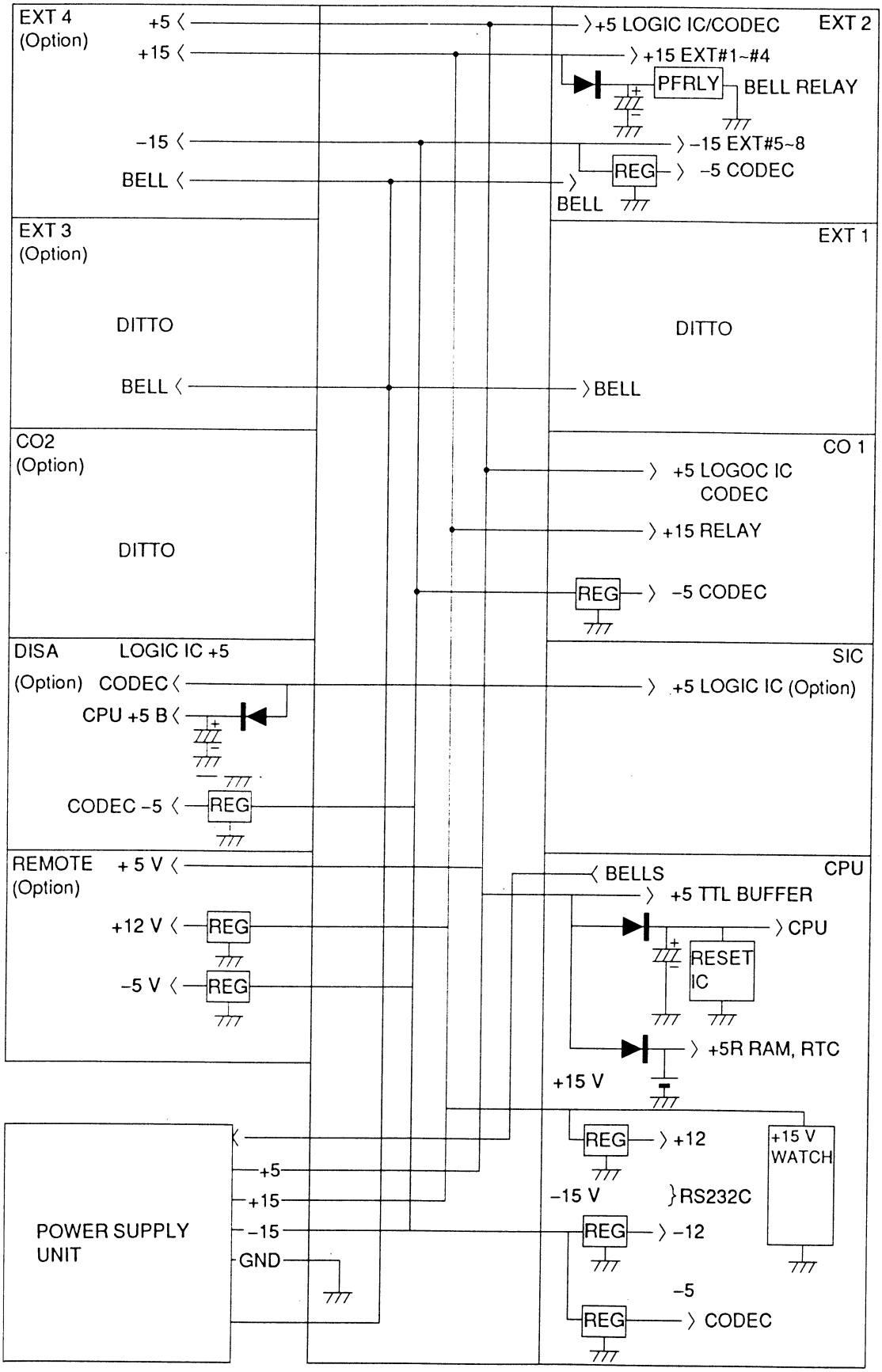

1-5. CONTENTS

This equipment has mainly 3 types of cabinets and 2 types of optional cabinets.

Each cabinet relates with each board about installation as follows.

■ **BASIC CABINET**
FRONT COVER

UPPER CABINET	REMOTE CARD	(Option)
	SIC CARD	(Option)
	DISA CARD	(Option)
	DOOR-PHONE CARD	(Option)
LOWER CABINET	CPU CARD	(Basic)
	BASIC CO CARD	(Basic)
	BASIC EXT CARD	(Basic)
	POWER SUPPLY UNIT	(Basic)
	MOTHER BOARD	(Basic)
	LED BOARD	(Basic)
	SMDR BOARD	(Basic)
	CALLER ID CARD	(Option)
	BATTERY BACKUP ADAPTER	(Option)

■ **OPTIONAL CABINET**
OPTIONAL UPPER CABINET

OPTIONAL LOWER CABINET	EXPANSION CO CARD	(Option)
	EXPANSION EXT CARD	(Option)
	CALLER ID CARD	(Option)

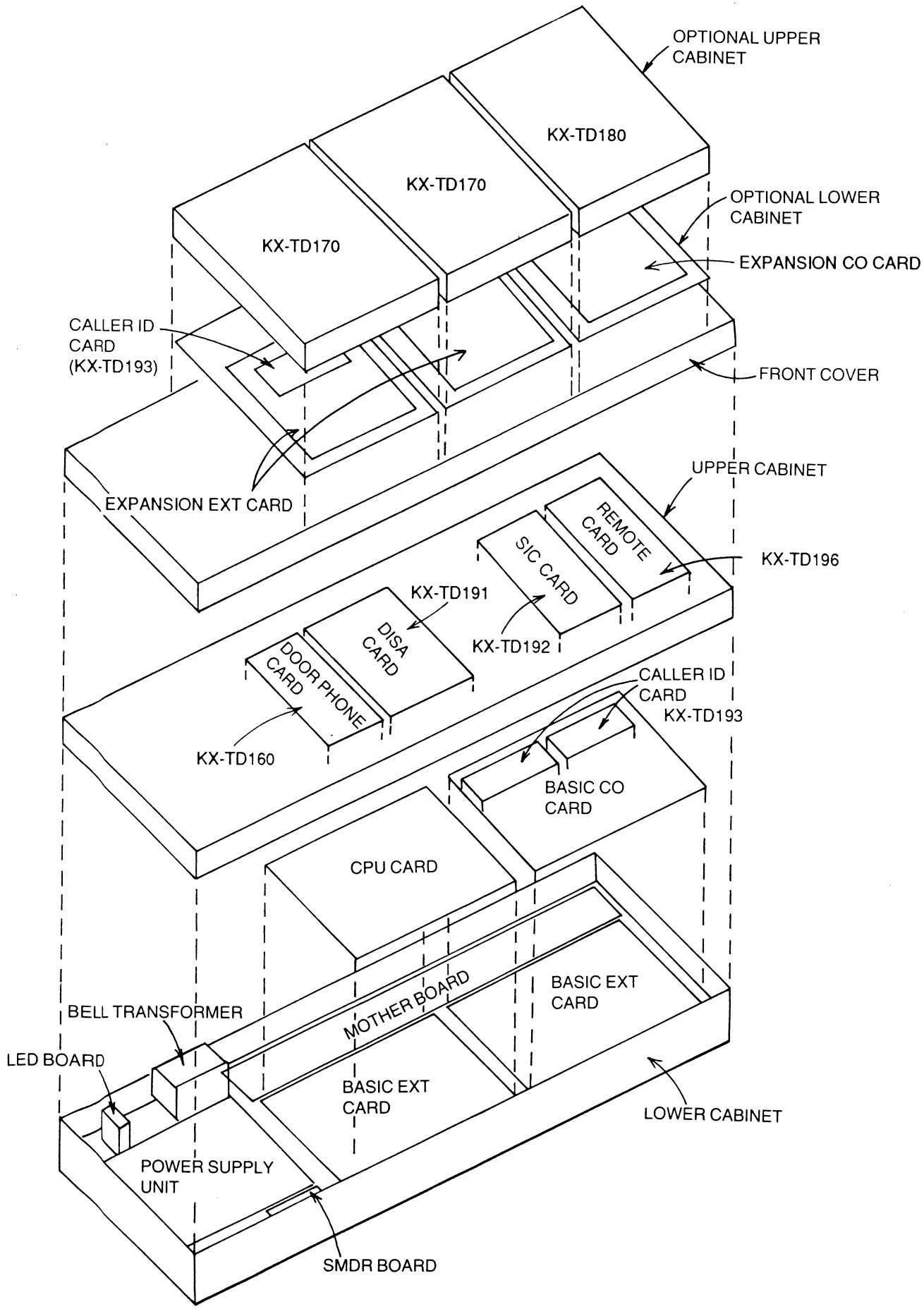
OPTIONAL UPPER CABINET
KX-TD180
KX-TD170
KX-TD170
OPTIONAL LOWER CABINET
EXPANSION CO CARD
CALLER ID CARD (KX-TD193)
FRONT COVER
EXPANSION EXT CARD
UPPER CABINET
REMOTE CARD
SIC CARD
KX-TD196
KX-TD191
DISA CARD
KX-TD192
DOOR PHONE CARD
CALLER ID CARD
KX-TD193
KX-TD160
BASIC CO CARD
CPU CARD
BELL TRANSFORMER
MOTHER BOARD
BASIC EXT CARD
LED BOARD
BASIC EXT CARD
LOWER CABINET
POWER SUPPLY UNIT
SMDR BOARD

2. FUNCTION OF EACH BOARD

2-1. BASIC

1) POWER SUPPLY UNIT

Power supply unit generates three DC voltage of +15, −15 and +5.3 V from AC power source, and supplies them to the system. To connect the option of BATTERY BACK-UP ADAPTER (KX-A46) allows the system to be connected with the back-up batteries as measure to the power failure.

Function	Description
Generating DC voltage	Generates +15, −15 and +5.3 V from AC power or the batteries. Capacities: +5.3 V, 3.0 A +15 V, 4.7 A −15 V, 4.5 A
Connecting batteries (by using KX-A46)	It recharges the batteries when AC power turns on. When AC power turns off, it is powered from the batteries, and if the voltage at the battery terminals are derated under the specified voltage, it cuts the batteries off to prevent the over discharge.
Bell Amp	It increases the bell signal from CPU CARD, and sends to the EXT CARD.

2) CPU CARD

CPU CARD covers the CPU function which controls the system and TSW (time sw.) function which exchanges the PCM lines as the main functions. In addition, it is equipped with the common resources such as the conference function, the clock function, and the clock generator function.

Function	Description
CPU function	Controls the general system according to the programs.
TSW function	Exchanges the PCM lines following the control from CPU.
Conference function	Allows the conference call of 3-person×6-conference.
Clock function	The clock LSI backed up by batteries realizes the clock function in the system.
Tone generator	Generates 4 types of the call progress tones and 2 channels of the DTMF tones.
Holding tone source	Internal holding tone source (optional for the derivative models) External holding tone source: 2 channels
External paging function	Out-put function for 2 channels of the external pagings
Serial I/F function	RS232C port: 1 port I/F for communication with MODEM IC on the REMOTE CARD: 1 port
Clock generator function	Generates the clock for PCM highway system and supplies to the system.
Voltage watching	Watches the voltages of +5 V and +15 V, resets the system if +5 V is derated.
Back-up function	Back up the CPU peripherals (+53 V) for 1 second or more during the power failing. Back up the system data in RAM and the clock IC for 7 years by the lithium battery.
OHCA function	Circuit for converting 2–4 w. signals. CODEC realizing OHCA (Off hook call announcement) function.
Bell signal generator function	25 Hz signals are generated by the CPU and the filter circuit.

3) BASIC CO CARD

BASIC CO CARD functions the interface between the system and the lines. 8 lines per one CO card are covered.

Function	Description
Ring detection function	Detecting the bell signals from the stations.
Catch of CO lines function	Catching the CO lines by making the DC current loop.
End of call function	CPC detection
Dial pulse transmission function	Out-put the dial pulse to the lines by switching the DC loop on and off.
2–4 wires convert	2 w. signals from the stations are converted in 4 w.
A/D, D/A convert	Converting between 4 w. analogue signals and PCM digital signals.
Transfer during power failure	Having 4 direct paths to the extensions for transferring when the power fails.
Diagnostic function	Interface in each line has the mode to connect with an extension line through a test path instead of a line.

4) BASIC EXT CARD

BASIC EXT CARDS are installed into the system as standards, and play a roll of the interface between the system and the terminals. The terminals which are connectable with this board are SLT, APITS and DPITS (including the Voice mail). 8 lines per one card are covered and they allow a parallel connection of SLT and APITS (mother and daughter operation) as well as the parallel connection of SLT and DPITS (independent operation).

Terminal	Function	Description
SLT	Power supply	Supplying the power to SLT for calling.
	Hook detection	Detection of On-hook and Off-hook when the bell signal is not presented.
	Ring trip detection	Detection of Off-hook when the bell signal is presented.
	Dial pulse detection	Detection of pulse dial
	DTMF tone detection	Detection of DTMF tone
	Switching in power failure	Connecting directly between the CO line and the terminal when power fails. 2 lines
SLT APITS	2–4 w. convert	Converting 2 w. from the terminals into 4 w.
	A/D, D/A convert	Converting between 4 w.-analogue signals and PCM digital signals by CODEC.
APITS	Data transmission	Communication with the APITS about the control data such as the key information, the ramp information.
	OHCA function	Having the paths connecting the APITS with the OHCA section in the main board
APITS DPITS	Current supply	Supplying the current necessary to operate the APITS and the DPITS through the data line.
DPITS	Data Transmission	Communicating with the DPITS about the voice (2 B) and the control data.
Common	Diagnostic function	Diagnosis of the CO card and the DTMF receiver. Diagnosis of the PCM highway by the loop back.

5) MOTHER BOARD
Each card of CPU, CO CARD, EXT CARD etc. is powered through the MOTHER BOARD, and also transmits the signals through it.

6) LED BOARD
LED BOARD is for installing LED which shows the operating status.

7) SMDR BOARD
SMDR BOARD leads signal of RS-232C out with DIN 25 pin connector.

2-2. RESOURCE OF OPTION

1) EXPANSION CO CARD (KX-TD180)
EXPANSION CO CARD is an optional card for extending the CO lines from 8 up to 12 lines. The differences between this card and the basic one are as follows;
- The number of lines are 4. (8 for basic one)
- 2 lines for the transfer function when the power fails

2) EXPANSION EXT CARD (KX-TD170)
EXPANSION EXT CARD is an optional card for extending the EXT lines from 16 up to 24 or 32 lines. The differences between this board and the basic one are as follows;
- No diagnostic function for the CO card

3) DOOR-PHONE CARD (KX-TD160)
DOOR-PHONE CARD is an optional card for connecting the door-phone and the door-opener with the system. The system can be installed with one card, and one of this card can cover 2 units of the door-phone and 2 units of the door-opener.

Function	Description
Current supply	Supplying the current to the door-phone.
2–4 w. convert	Converting 2 w. signals from the door-phone into 4 w.
A/D, D/A convert	Converting between the 4 w. analogue signals and the PCM digital signals by CODEC.
Detect connection of Door-phone	Detect if this board is connected with the door-phone.
Door-opener control	2 channels of the relay contact out-put for the door-opener control.

4) REMOTE CARD (KX-TD196)
REMOTE CARD is an optional card for the maintenance through the telephone line such as the change, the up-load and down of the system data, the diagnostic of the system and etc.

Function	Description
A/D, D/A convert	Performing A/D and D/A between the PCM highway and MODEM by CODEC.
MODEM function	MODEM function at 300 and 1200 bps. Connected with the CPU through the serial interface.

5) DISA CARD (KX-TD191)

DISA CARD is an optional card that automatically responds to the incoming signals on the CO lines without through operator, and by receiving the secondary dial (DTMF signals) that calls the specific extension, connects with the MODEM and between the CO lines. The number of channels is 2.

Function	Description
Sending OGM	Sending OGM (Out Going Message) stored in RAM to the CO line. 2 types of OGM for 32 sec. each are stored.
DTMF signal detection	After sending OGM to CO line, detecting the in-coming signal of DTMF.
Call between CO lines	Two call paths for call between CO lines.
DTMF repeat	When calling between the CO lines, resending the received DTMF to maintain the certain level of the DTMF signals.
End of call detection	When calling between the CO lines, detecting the no tone, the cyclic tone and the continuous tone. 2 channels/1 path, total 4 channels.
OGM record	Recording the OGM from the specific extension into RAM. Controlling the level by AGC circuit. Only one channel is available as the recording channel.
FIFO communication	Communicating between CPU on this card and main CPU through FIFO memory.

6) SYSTEM INTERCONNECTION CARD (KX-TD192)

SYSTEM INTERCONNECTION CARD is an optional card for connecting two systems together to be operated as one system. It plays the interface for 30 channels of the call lines and 1 control channel. Signal types are three types; the PCM highway, the highway clock and the frame pulse.

Function	Description
Driver/receiver	Sending the PCM highway, the highway clock and the frame pulse in the system to another system. Three signals fore-mentioned are received from another system.
HDLC control	Converting the control data into the HDLC protocol, and sending it to another system through the PCM highway. The data of HDLC protocol from another system are converted into the normal data.
Clock watch function	Watching the PCM highway clock and the frame pulse from another system.

7) CALLER ID CARD (KX-TD193)

CALLER ID CARD is an optional card corresponding to "caller ID service" available in the north American market. This board is added on the CO card and detects the 300 bps modem signals transmitted during recesses between the bell signals from the station, and converts them into the parallel data.

One card is corresponded to the 4 lines. Two cards can be installed on the BASIC CO CARD (8 lines) and one card can be installed on the EXPANSION EXT CARD (4 lines).

8) BATTERY BACKUP ADAPTER (KX-A46)

BATTERY BACKUP ADAPTER is an interface option to connect the batteries. Using this option, when AC power turns off, it is powered from the batteries, and if the voltage at the battery terminals are derated under the specified voltage, it cuts the batteries off to prevent the over discharges.

3. EXPLANATION OF CIRCUIT OPERATION

3-1. BASIC

1) POWER SUPPLY UNIT

POWER SUPPLY UNIT consists of the following.

Line Filter Section
Rectifier and Smoothing Section
Switching Section
Control Section
+15 V Circuit
−15 V Circuit
+5.3 V Circuit
Bell Amp Circuit

POWER UNIT

■ **Line Filter Section**

Common mode noise is removed by C401, C402 and C405 to C406, and normal mode noise by L400 and L401. Lightening surges are absorbed by CR400, CR401 and SA400.

■ **Rectifier and Smoothing Section**

The input signal is full-wave rectified by bridge diode D400, and smoothed by C408, C409, resulting in a DC current. TH401 and TH402 are power thermisters.

■ **Switching Section**

The switching section is a basic RCC type which uses the IC400 included power MOS.FET. D401, R403 and C412 are for resetting the excitation energy stored in T400 while T400 is OFF. C410 and R408 are used as a snuffer for FET in IC400.

■ **Control Section**

IC400 is a RCC type switching regulator adopted power MOS.FET. The external circuit of IC400 has the following roles.

R401, R402, C111: For starting
R400: For detecting an electric current
C417: For adjusting over current detector level
R404, C414: For compensating phase
R407, C415: For compensating over current protector circuit parts temperature dependence
PC400: For feed back

BLOCK DIAGRAM

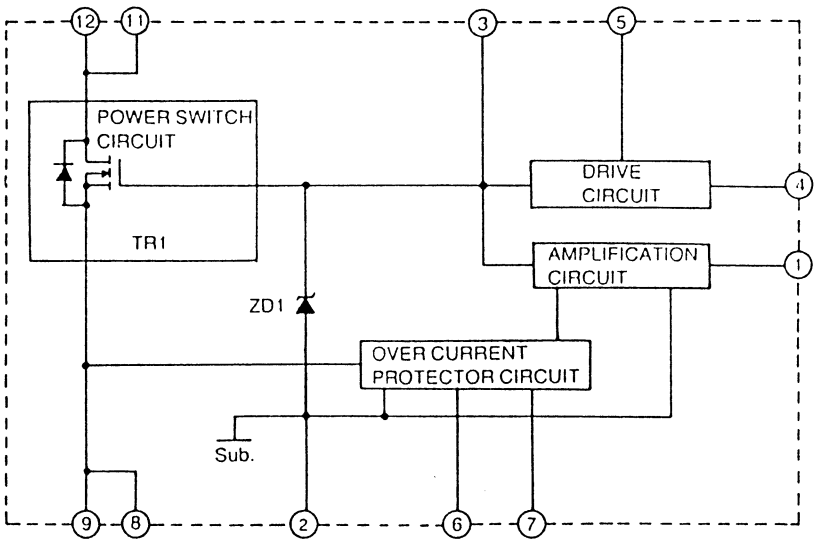

■ +15 V Circuit

There are 2 output of switching transformer, T400 and +15 V is generated from the circuit connected to pin 12, 13-11. +15 V cannot be stabilized by oscillation controll of the primary side since feed back is not done on the primary side from +15 V line. So, the chopper regulator, IC450 and the circuit around it stabilize +15 V. The following is the roles of main surrounding circuit.

D452, C454, C455: Rectifier and smoothing circuit
L450: For preventing resonance
R456, C459: For compensating phase
R457: For detecting an electric current
L451, C460: Filter
L454, C467: Filter

■ −15 V Circuit

The circuit connected pin 8, 9-10 of switch transformer T400 generates −15 V. With feed back on the primary side from −15 V line, −15 V is stabilized by the oscillation control of the primary side. The following is the roles of main surrounding circuit.

D451, C450: Rectifier and smoothing circuit
D450, Q450, C452: Feed back circuit
PC400, R451, R454, VR450, R453, L453, C468: Filter

■ +5.3 V Circuit

+5.3 V is generated from the chopper regulator, IC451 connected to the +15 V output. It has an over voltage protection circuit to prevent abnormal output voltage. The following is the roles of main surrounding circuit.

L452: Filter
R460: Electric current detection resistor
F401, SCR401: Over voltage chopper circuit
D453, R466: Over voltage detection circuit
R467, C465

■ Bell Amp Circuit

It increases bell signals sent from CPU board in Power Op. Amp, IC452 and sends them into the bell amp. Then, they are sent to the extension boards.

CIRCUIT DIAGRAM

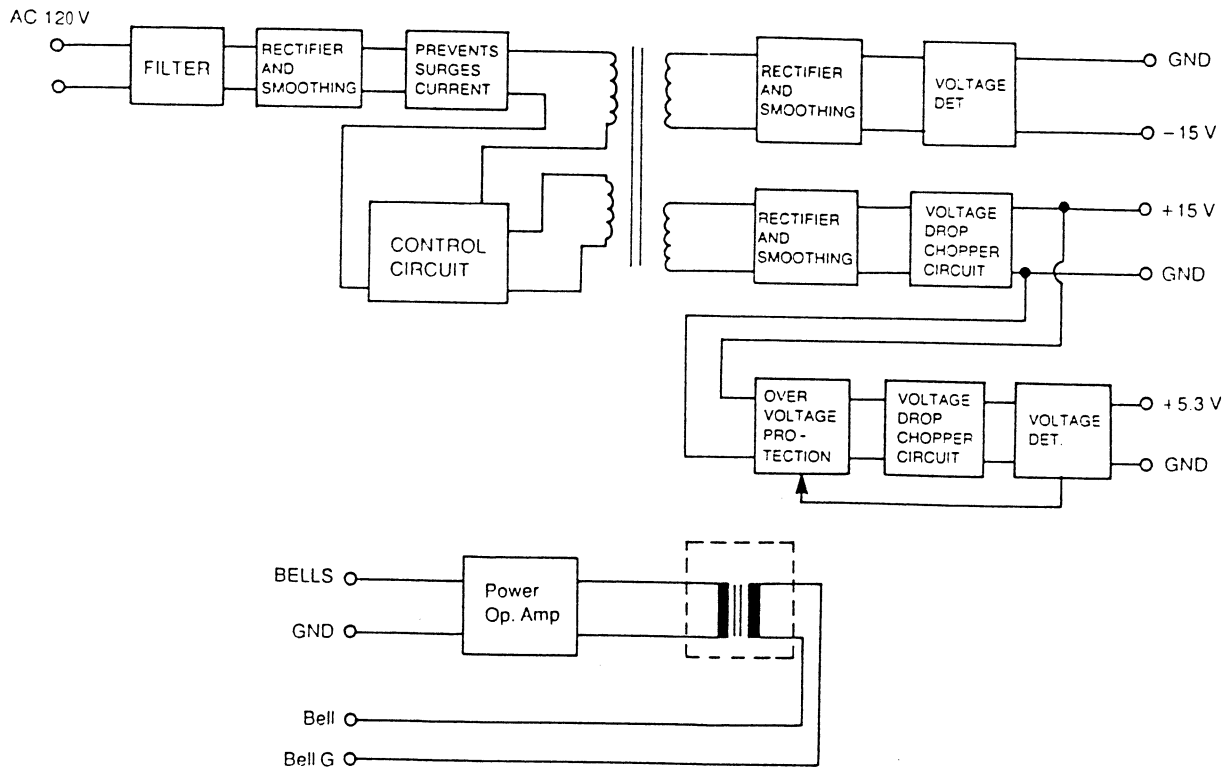

2) CPU CARD

CPU CARD consists of the following:

- CPU Circuit
- TSW Circuit
- Conference Circuit
- Tone Generator Circuit
- Clock Generator Circuit
- Clock Circuit
- OHCA Circuit
- Hold Tone Circuit
- Battery Back-Up Circuit
- Voltage Watching Circuit
- RS-232C inteface Circuit
- Level Signal Generator Circuit

■ CPU Circuit

Circuit Operation:

16 bit CPU (system clock=8.192 MHz) (IC1)
- with 68HC000 core CPU
- 3 Serial I/O ports
- 16 bit Paralleled I/O ports
- 3 level Interrupt Controller
- 16 bit Timer 3 ch.
- Address Decoder
- DTACK Contoroller

512 Kbyte EPROM (Program)	(IC20, 21)
64 Kbyte SRAM	(IC24, 25)
64 Kbyte Pseudo SRAM	(IC22, 23)
Address Buffer	(IC33, 34)
Data Buffer	(IC31)
Control Signal Buffer	(IC32, 35)
Gate Array	(IC2)

- with Address Decoder
- Peripheral Controller
- 2 Paralleled Out Ports

X'tal (8.192 MHz) (X1)

Composition:

The CPU (IC1) controls the system according to the programs stored in the ROM (IC20, 21). Part of the RAM (IC24, 25) area is backed up by batteries and stored the system data.

CPU CARD

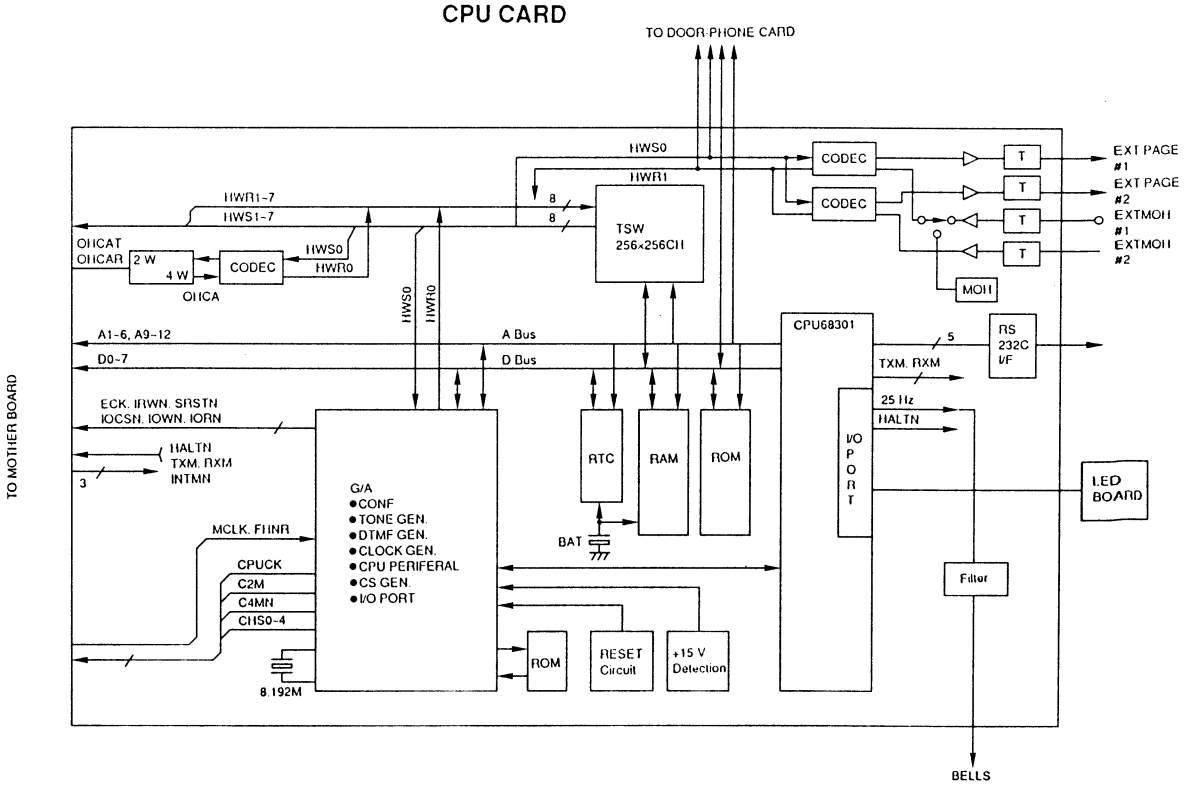

■ TSW Circuit

Composition:

Time Switch IC (IC3)

Circuit Operation:

TSW (Time division Switch) Circuit exchanges totally 256 call channels, which is organized into the PCM highways of 8 lines, and one of the lines is composed of 32 channels. This circuit is integrated into one chip of LSI (IC3), and is controlled by the CPU (IC1) to present the data on the up highways of HWR0 through 7 to the down highways of HWS0 through 7.

The uses of each highways are shown below.

HW 0	Conference Circuit, Tone-DTMF Generator, External paging, Music ON HOLD, OHCA, Door-phone
HW 1	CO #1~#8
HW 2	EXT #1~#8
HW 3	EXT #9~#16
HW 4	EXT #17~#24
HW 5	EXT #25~#32
HW 6	CO #9~#12 DISA, REMOTE
HW 7	System Interconnection (SIC)

■ Conference Circuit

Composition:

Gate Array (IC2)

3 personsx6 conferences controller

128 Kbyte EPROM (Summation Table, Wave Data) (IC19)

Circuit Operation:

Conference Circuit is for enabling the three person's conference. This circuit is connected with HWS0 of the down highway and HWR0 of the up highway. After the voice data which are transferred to HWS0 at TSW are processed with the summation in this circuit, and are presented to HWR0 and transferred at TSW (IC13) again. This circuit consists of the Gate Array (IC2) and ROM (IC19). Gate Array (IC2) picks up the voice data, multiplies, makes ROM address, and sends to ROM. Conference operation is added by ROM table. The summation table of the PCM data is stored in ROM. ROM output is sent to Gate Array. Gate Array sets the data on the highway. This circuit covers 3-personx6-conference. This circuit function to reduce 6 dB of 2-persons' level out of 3-person to realize the conference call of 2-CO-person and 1-EXT-person.

■ Tone Generator Circuit

Composition:

same as Conference Circuit

Circuit Operation:

Tone Generator Circuit presents 4 kinds of the call progress tone and 2 channels of the DTMF tone to DHW0 of the down highway. This circuit consists of the Gate Array (IC2) and ROM (IC19) which are common to the conference circuit. ROM (IC19) are stored inthe PCM data of the tone. Gate Array makes ROM address, gets tone data from ROM and sets the data on the highway.

■ Clock Generator Circuit:

Composition:

same as Conference Circuit

Circuit Operation:

Clock Generator Circuit is a circuit to generate PCM clock from X'tal (X1) and Gate Array (IC2).

The generated clocks are shown below.

C4MN:	4,096 MHz	Highway clock
C2M:	2.048 MHz	Highway clock
FH1N:	8 kHz	Frame pulse
CHS0~4:	128, 64, 32, 16, 8 kHz	Channel select signal
CP27~31:	8 kHz	Synchronous signal for CODEC

The sources of these clocks are the local OSC of 8,192 MHz crystal (X1) and 4,096 MHz from SIC. 4,096 MHz from SIC is used only in the slave mode when this system is connected with the another one as the inter-system connection. Switching the clock sources is controlled by CPU (IC1).

■ **Clock circuit**

Composition:

Real Time Clock IC (IC26)

Circuit Operation:

Clock Circuit is a circuit which gives the clock function for this system, and consists of the clock IC (IC26) backed up by the batteries. This circuit presents one second interruption to CPU (IC1).

■ **Hold tone circuit**

Composition:

CODEC IC (IC7, 8)
IC12, T4, T5, etc.

Circuit Operation:

The hold tone circuit is a circuit which presents the hold tone for the system. The tone sources are one system of the internal hold tone (as a local option) and two systems of the external hold tone. The internal hold tone and one of the external hold tone are switchable alternatively to be used (as a local option). The analogue signals from the tone sources are changed to the digital ones by CODEC IC (IC6) and presented to HWR0 of the up highway. The external hold tone circuit has AGC function.

■ **External Paging Circuit**

Composition:

CODEC IC (IC7, 8)
IC10, T2, T3, etc.

Circuit Operation:

External Paging Circuit is a circuit which presents the voice to the external amplifier. This circuit converts the digital voice data on the HWS0 of the down highway to the analogue signals by CODEC, and presents the external paging port. This circuit consists of two systems.

■ **OHCA Circuit**

Composition:

CODEC IC (IC6)
IC11, T1, etc.

Circuit Operation:

OHCA Circuit is a circuit which works as OHCA (Off Hook Call Announcement) function. This circuit converts 2 lines of OHCA path from the internal circuit to 4 lines, and carries out A/D and D/A conversion between HWR0 of the up highway and HWS0 of the down highway by CODEC (IC6).

■ **Back Up Circuit**

Composition:

BAT, C1 etc.
Back Up Circuit is a circuit which has two functions as follows;
- Back up the CPU (IC1) peripherals for one second when AC power momentarily fails.
- Back up the Clock IC (IC26) and the part of RAM for 7 years.

Circuit Operation:

Back-up is done by the super capacitor (C1) at the momentary AC power failure, and the clock IC and RAM are backed up by the lithium of secondary battery (BAT).

■ **Voltage Watching Circuit**

Composition:

Reset IC (IC13)
Q6, 7 etc.

Circuit Operation:

Voltage Watching Circuit is a security circuit which detects the deration of +5 V and +15. If +5 V is derated, this circuit resets the system. If +15 V is derated, this circuit presents "L" to I/O port in CPU.
The deration of +15 V means AC power off.

■ RS-232C Interface Circuit

Composition:

Receiver/Driver IC (IC15, 16)
16 bit CPU (IC1)

Circuit Operation:

RS-232C Circuit is a circuit for realizing the data transmission between CPU 68301 (IC1) and a personal computer/printer etc. This circuit consists of a serial interface built in CPU and the level conversion circuit. When the power turns on, the power supply for the RS-232C driver (IC15, 16) is controlled by CPU to prevent the indefinite data presentation.

■ Level Signal Generator Circuit

Composition:

16 bit CPU (IC1)
IC14, etc.

Level Signal Generator Circuit is a circuit which generates the bell signal to the SLT of EXT. This circuit is composed of the out-put port in CPU (IC16), the filter and the power amplifier (IC14), and generates the bell signal.

3) BASIC CO CARD

BASIC CO CARD consists of the following:
Call Interface
Parallel I/O Circuit
Timing Signal Generation Circuit

■ Call Interface Circuit

Call Interface Circuit is a circuit which works as the interface between the call line and the PCM highway, and is classifies as following circuits.

Composition:

(a) Bell Signal Detection Circuit
(b) DC loop formation Circuit
(c) Pulse Dial Transmission Circuit
(d) 2 W-4 W Lines Conversion Circuit
(e) A/D, D/A Conversion Circuit
(f) Diagnostic Circuit

Call Interface Circuit consists eight lines corresponding to each call line.
(Transfer Circuit at Power Failure are four lines.)

Circuit Operation:

(a) Bell signal Detection Circuit

When CO line is idle, EXRLY pin of IC111 is low and RLY101 is OFF, photocoupler PC101, PC102, are OFF. BELL pin of IC111 is high. When there is an incoming signal at the CO line, the call signal is rectified by zener diode D102 and D103 and photocoupler PC101, current flows to the photocoupler PC101, and PC101 turns ON. This causes BELL pins of IC111 to change from a high to low. This change is detected as incoming call thus processing are executed.

Call Signal Path:

Tip–L102–L104–RLY101 (6–7)–PC101 (1–2)–R101–C102–RLY101 (2–3)–L103–L101–SA103 (4–2)–Ring

(b) DC Loop Formation Circuit

In the off-hook mode, EXRLY of IC111 is low, and RLY101 is OFF.

DC Loop Path:

Tip–L102–L104–RLY101 (6–7)–R118–D101 (—+)–PC102 (4–3)–Q101
D101 (——)–F100–RLY101–L103–L101–SA103 (4–2)–Ring

(c) Pulse Dial Transmission Circuit

When off-hook, pulse dial transmission is executed by alternating on-hook and off-hook.
On-hook and off-hook is controlled by PC102. During the make position, dial pin of IC111 is low level and PC102 is ON. During the break position, dial pin of IC111 is high level and PC102 is OFF.
At this time, BELL pin of IC111 become a low. Afterwards, BELL pin of IC111 monitors for a change (low to high) for more than 400 ms. If more than 400 ms has been detected it assumes that an on-hook state has occurred and the CO line circuit is restored to the idle state. The voice signal is transmitted into the system via the transformer T101.

(d) **2 W–4 W Lines Conversion Circuit**
This circuit converts 2-line analogue signals from CO line to 4-line signals. The voice analog signal from the line is outputted from T101 to the 2–4 Line Conversion Circuit, and the circuit flow is
T101 (4–6)–R116–5 pin of IC102
IC102 is a CODEC. The voice analog signal is converted to PCM signal by this CODEC. PCM signal from TSW is converted to voice analog signal by the CODEC. And the circuit flow is as following.
2 pin of IC102–C108 R112–2 pin of IC101–R107–T101

(e) **A/D, D/A Conversion Circuit**
This circuit is for conversion between 4-line analogue signals and the PCM digital signals. CODEC (IC102) has a power down function at no operation and a μ/A law switching over function, and are controlled through the parallel I/O port.

(f) **Diagnostic Circuit**
This circuit is a circuit which checks the function of CO cards. This circuit is composed of the relays (RLY101) which connect the path for the interface circuit of #1 (or #9) line in EXT card. The function check of the DTMF receiver circuit on EXT card. The function check of the DTMF receiver circuit on EXT card can be done by presenting the DTMF signals from CO card.
When EXRLY pin of IC111 becomes high, RLY101 turns ON and make the path.

■ **Parallel I/O Circuit**
Composition:
Gate Array
IC114, 116, 117, 121, 123

Circuit Operation:
Parallel I/O Circuit is a I/O port for controlling the Call Interface Circuit, and is composed of one gate array (IC111).

■ **Timing Signal Generation Circuit**
Composition:
IC112, 120, 121, 122

Circuit Operation:
Timing Signal Generation Circuit is a circuit which generates the synchronous signals for CODEC. It generates eight kinds of signals from the channel select signals (CH0–4) presented by the CPU CARD and from the highway clock (C2M).

BASIC CO CARD

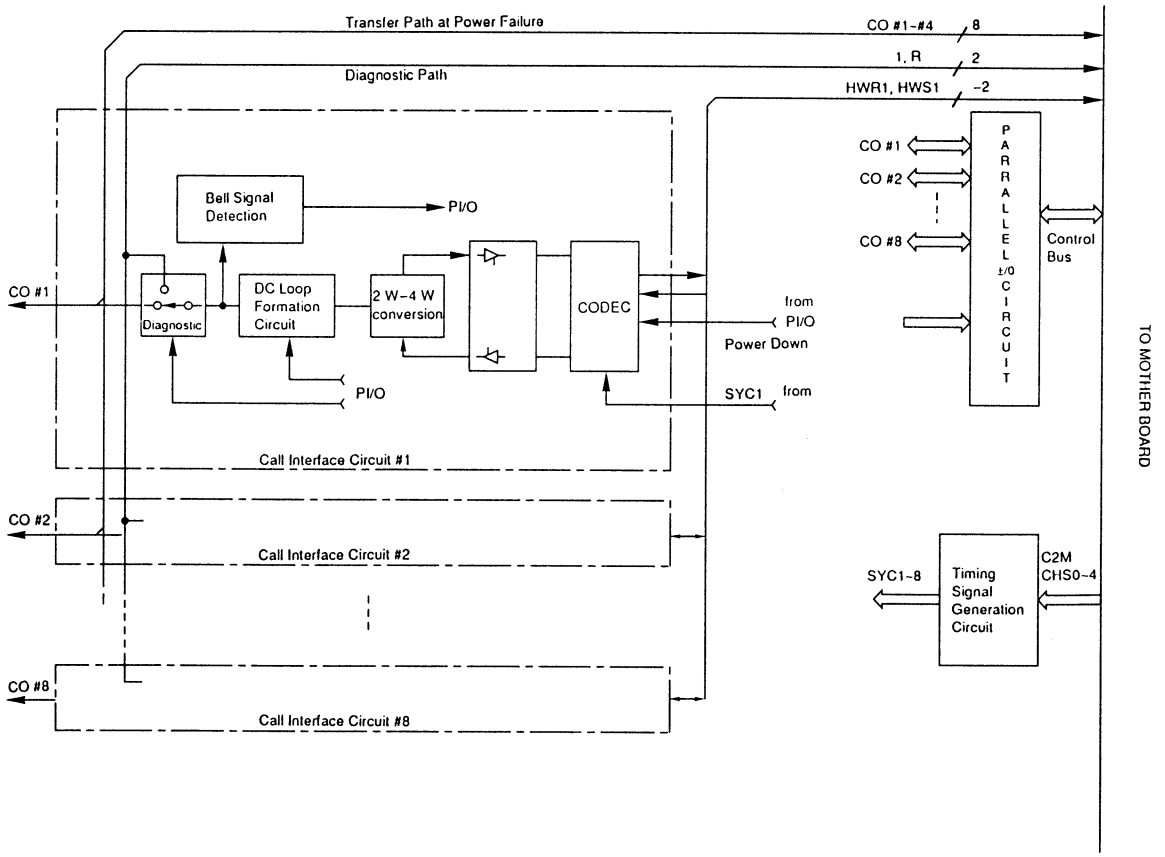

4) BASIC EXT CARD

BASIC EXT CARD consists of the following:
Analogue Telephone Circuit
DTMF Receiver Circuit
APITS Data Communication Circuit
DPITS Data Communication Circuit
HDLC Controller
APITS/DPITS Data Transmission And Reception Circuit
Parallel I/O Port
Timing Signal Generation Circuit

■ Analogue Telephone Circuit

Analogue Telephone Circuit is composed of the following circuit, this consists of eight circuit corresponding to each extension line.

Composition:

(a) Current Supply Circuit
(b) Hook Detection Circuit
(c) Ring Trip Detection Circuit
(d) 2–4 Lines Conversion Circuit
(e) A/D and D/A Conversion Circuit
(f) Transfer Circuit At Power Failure
(g) Diagnostic Circuit

Circuit Operation:

(a) Current Supply Circuit

Current Supply Circuit is constant-current circuit which supplies the call current to SLT. Its voltage is ±15 V.
With the telephone off-hook, a DC loop is formed, and current is supplied to the telephone. This Current is limited to about 30 mA by D204, D205, R205, D206, D207 and R208 respectively.
(+15 V)–R206–R205–Q203–RLY202 (b–c)–RLY201 (c–b)–L204–RLY200 (m–c)–Telephone–RLY200 (c–m)–L205–RLY201 (b–c)–RLY202 (c–b)–Q204–R208–R209–(–15 V)

(b) Hook Detection Circuit

Hook Detection Circuit is a circuit which detects On-hook or OFF-hook of SLT when the bell signals are not presented, and detects the dial pulse as well.
When the telephone handset is taken off the hook, a DC loop is formed and current flows to Q205. Because of this, the corrector of Q205 changes from high to low, thus HOOK pin of IC211 becomes low, and the CPU detects an off-hook condition. When the handset is replaced back on hook, the DC loop is interrupted and current no longer flows to Q205 and the corrector of Q205 goes high and the CPU assumes an on-hook condition.

(c) Ring Trip Circuit

This circuit is for detecting Off-hook of SLT when the bell signals are presented.
Normally Q206 is OFF during transmission of the bell signal. When answering the telephone, the DC loop of the call signal circuit is established, Q206 then turns ON, and base of Q207 becomes low. Because of this, the corrector of Q207 becomes high and RLY202 is reset. With resetting of RLY202, the loop of bell signal circuit is interrupted and the DC loop of the call circuit is established.

(d) 2 W–4 W Lines Conversion Circuit

This circuit converts 2-line analogue signals from SLT and APITS to 4-line signals.
The voice analog signal from the line is outputted from C205 to the 2–4 Line Conversion Circuit, and the circuit flow is
C205–R219–6 Pin of IC202–R217–5 Pin of IC201
IC201 is a CODEC. The voice analog signal is converted to PCM signal by the CODEC. PCM signal from TSW is converted to voice analog signal by the CODEC. And the circuit flow is as following.
2 Pin of IC201–C208–R215–2 Pin of IC202–R211–C205–RLY202 (B–C)–RLY201 (C–B)–L204–RLY200 (M–C)–Telephone

(e) A/D and D/A Conversion Circuit

This circuit is for conversion between 4-line analogue signals and the PCM digital signals. CODEC (IC201) has a power down function at no operation and a μ/A law switching over function, and is controlled through the parallel I/O port.

(f) Transfer Circuit at Power Failure

This circuit is a circuit for connecting directly between CO line and SLT when the power fails. The call line is automatically changed to the direct call mode when the voltage of +15 V is derated (Power down). It is controllable through I/O port as well. This circuit exists only in the extension of #1~#2, and CO #3~#4 are connected with EXT #9~#19. This circuit maintains the current mode for over one second when AC power fails momentarily.
When power fails or 117 pin of IC211 becomes low, corrector of Q221 is high, RLY200 turns OFF and make the path.

(g) **Diagnostic Circuit**
This circuit is a circuit which checks the function of CO cards. This circuit exists only in the extension of #1 (or #9), and is composed of the relay (IC211) which connects the paths for the interface circuit of each line in CO card in stead of telephone terminals. The function check of the DTMF receiver circuit on this card can be done by presenting the DTMF signals from CO card.
When EXRLY pin of IC211 becomes high, RLY201 turns ON and makes the path.

■ **DTMF Receiver Circuit**
Composition:
DTMF Receiver IC (IC215, IC216)
8→1 Analogue Switches (IC217, IC218)

Circuit Operation:
DTMF Receiver Circuit is a circuit for receiving the DTMF dials presented by SLT and APITS. This circuit is composed of the 8→1 Analogue Switches (IC217, 218) and the DTMF Receiver IC (IC215, 216). This circuit is incorporated two lines on one card, each line is connected through the eight extensions and the analogue switches (IC217, 218) to the DTMF receiver IC (IC215, 216). The received data of DTMF receiver are read through the data bus by the main CPU (IC1).

■ **APITS Data Communication Circuit**
Composition:
Gate Array (IC211)

Circuit Operation:
APITS Data Communication Circuit is a circuit which performs the serial/parallel conversion of the control data between APITS comm. paths and the main CPU (IC1). This circuit covers 8 lines corresponding to each extension, and 8 lines are integrated into on Gate Array (IC211).

■ **DPITS Data Communication Circuit**
Composition:
Gate Array (IC211)

Circuit Operation:
DPITS Data Communication Circuit is a circuit which has the following functions. This circuit covers 8 lines corresponding to each extension, and 8 lines are integrated into one Gate Array (IC211).
•B channel communication
The B channel data are transferred between the DPITS comm. path and the PCM highway. The transmitting capability is 64 kbps×2.
Note) B channel stands for "Barer Channel", normally transmitting the voice data.
•D channel communication
The data are transferred between the DPITS comm. path and the HDLC controller, serial bus.
The transmitting capability is 16 kbps. Because the communication between HDLC controller and this circuit is done as 1 vs. 1, the HDLC controller switches the communicating extension every for 8 ms. Therefore, the communication per one extension is done only for 8 ms at 64 ms cycles, the actual transmitting capability is 2 kbps.
Note) D channel stands for "Data Channel", transmitting CPU control data.
•C channel communication
The serial/parallel data conversion are done between the DPITS comm. path and the main CPU data bus. The level (H or L) transmission is only possible through the C channel.
Note) C channel stands for "Control Channel".

■ **HDLC Controller**
Composition:
HDLC Controller IC (IC213)

Circuit Operation:
HDLC Controller is a circuit which functions the data format conversion of the D channel between the DPITS comm. line installed with a Gate Array (IC211) and the CPU data bus by following the HDLC protocol. The serial/parallel conversion is done at the same time. Though this circuit communicates with 8 channel of the DPITS comm. circuit, since it can communicate only with one channel at a time, as before mentioned it, switches the communicating extension every for 8 ms.
This circuit is composed of one IC (IC213).

■ **APITS/DPITS Data Transmission and Reception Circuit**
Composition:
Q201, Q208, IC203, T201 etc.

Circuit Operation:
The circuit functions the wave shaping and the level conversion between the date line from the telephone terminal and the Gate Array (IC211), and supplies the current to the terminal through the data line. The data communication is done through this circuit with any kinds of the terminal whichever APITS of DPITS.
This circuit consists of the drive circuit (Q201, Q208, etc.), the receive circuit (IC203) and the transformer (T201).

■ **Parallel I/O Port**

Composition:

Gate Array (IC211)

Circuit Operation:

This circuit is a circuit which controls the analogue telephone circuit, and integrated into the Gate Array (IC211).

■ **Timing Signal Generation Circuit**

Composition:

Gate Array (IC211)

Circuit Operation:

This circuit is a circuit which generates the synchronous signal for CODEC (IC201) and the frame pulse for the HDLC controller (IC213). These signals are generated from the channel select signals (CHS0~4) and the highway clock (C4MN) presented by the CPU Card and integrated into the Gate Array (IC211).

BASIC EXT CARD

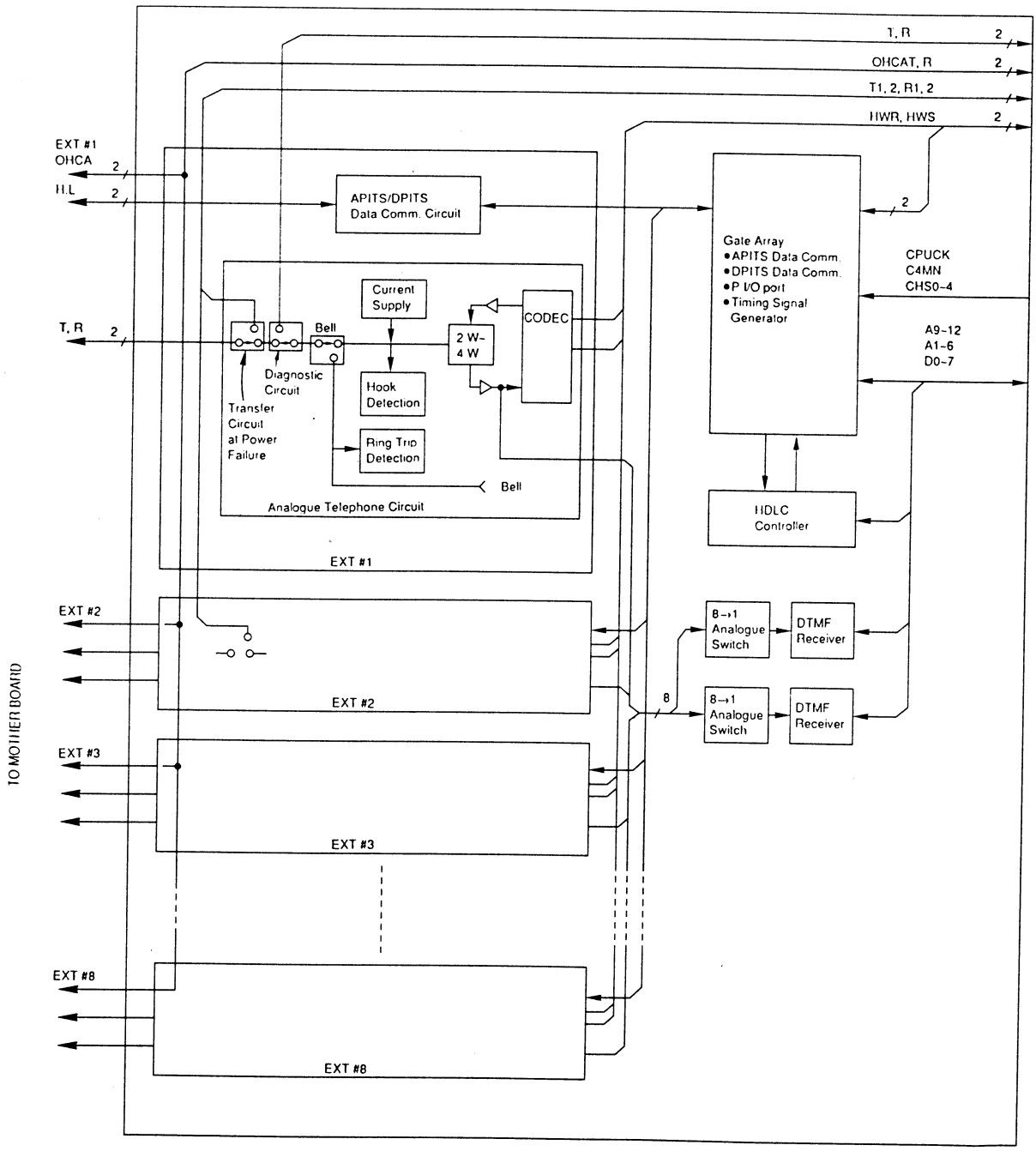

3-2. RESOURCE OF OPTION

1) EXPANSION CO CARD (KX-TD180)

The circuit on this card has the following differences from the BASIC CO CARD. Others are the same as the basic one.
- Number of CO lines are four.
- Two lines paths for the transfer at power failure.

2) EXPANSION EXT CARD (KX-TD170)

The circuit on this card has the following differences from the BASIC EXT CARD. Others are the same as the basic one.
- No diagnostic circuit for CO CARD
- Two lines paths for the transfer at power failure

3) DOOR-PHONE CARD (KX-TD160)

DOOR-PHONE CARD consists of the following:
Door-Phone Interface Circuit
Door Opener Circuit

■ Door-Phone Interface Circuit

Door-Phone Interface Circuit is a circuit which functions the interface between the door-phone and the PCM highway, and is composed of the following circuits.

Composition:

(a) Circuit for detection whether the door-phone is connected or not.
(b) Current supply circuit
(c) Hook detection circuit
(d) 2–4 lines conversion circuit
(e) A/D and D/A conversion circuit (CODEC) IC2

Circuit Operation:

(a) Circuit for detection whether the Door-Phone is connected or not.

When the Door-Phone is not connected, base of Q2 is high. When corrector of Q2 is low, input pin of IC5 is low. When the Door-Phone is connected, base of Q2 is low. When corrector of Q2 is high, input pin of IC5 is high. CPU (IC1) on CPU CARD gets information through IC5 whether the Door-Phone is connected or not.

(b) Current Supply Circuit

Q3 supplies current to the Door-Phone line through the transformer (T1).

(c) Hook Detection Circuit

When the call button of Door-Phone isn't pushed, base of Q1 is high. When corrector of Q1 is low, input pin of Q1 is low. When the call button of Door-Phone is pushed, base of Q1 is low. When corrector of Q1 is high, input pin of IC5 is high. CPU (IC1) on CPU CARD gets information through IC5 whether the call button is pushed or not.

(d) 2–4 Lines Conversion Circuit

This circuit converts 2-line analogue signals to 4-line signals.

(e) A/D, D/A Conversion Circuit

This circuit is for converting the analogue signals from Door-Phone to the PCM digital signals to present to the PCM highway, and also converting the data on the PCM highway into the analogue signals to the Door-Phone. This circuit has the power down function and the μ/A conversion function.

■ **Door Opener Circuit**
This is the relay circuit which controls the Door Opener connected externally. The control is made through the parallel I/O port (IC4). Two of this circuit are installed on a card.

Composition:
IC4, Q7, RLY1, etc.

Circuit Operation:
When CPU (IC1) on CPU CARD make I/O port (IC4) high, transistor (Q7) controls the relay (RLY1) ON. When CPU (IC1) on CPU CARD make I/O port low, transistor controls the relay OFF.

DOOR-PHONE CARD

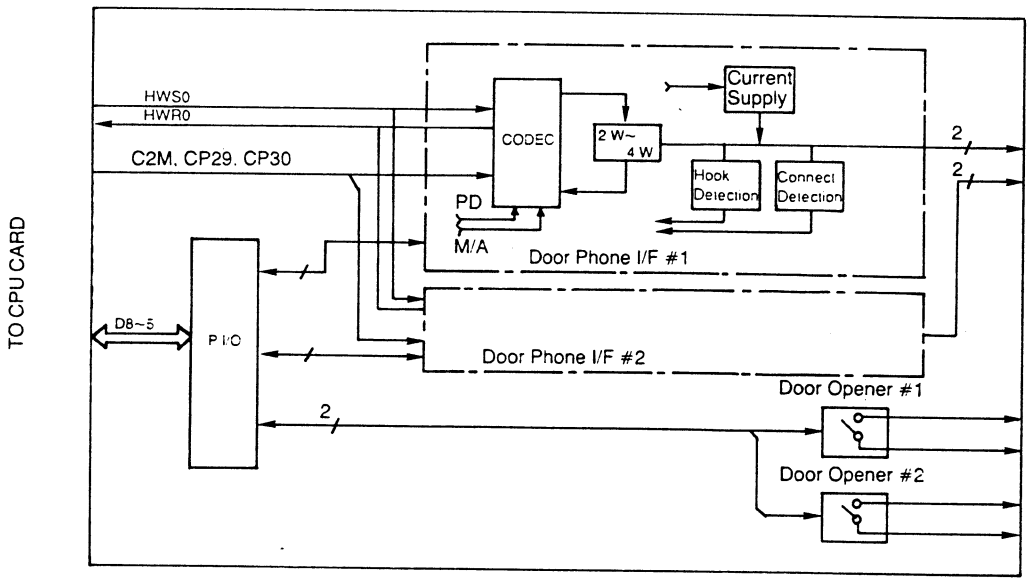

4) REMOTE CARD (KX-TD196)

REMOTE CARD consists of the following:
MODEM Circuit
A/D and D/A Conversion Circuit
Timing Signal Generation Circuit
CPU Interface Circuit

■ **MODEM Circuit**
Composition:
IC8, IC14, X1, etc.

Circuit Operation:
MODEM Circuit is connected with the CPU (IC1) on CPU CARD and the serial data bus, and converts the serial data from CPU into the MODEM signal to present for CODEC (IC13), also converts the MODEM signal from CODEC into the serial data to transmit for the CPU. MODEM function is executed by one IC (IC14).

■ **A/D and D/A Conversion Circuit**

Composition:

CODEC IC (IC13)

Circuit Operation:

This circuit is for converting the analogue signals from MODEM circuit to the PCM digital signals to present to the PCM highway, and also converting the data on the PCM highway into the analogue signals to the MODEM circuit. This circuit has the power down function and the μ/A conversion function.

A/D and D/A Conversion Circuit is composed of one IC (IC13).

■ **Timing Signal Generation Circuit**

Composition:

IC1, IC4, IC10, IC11

Circuit Operation:

This circuit is a circuit which generates the synchronous signals for CODEC (IC13). The signals are generated from the channel select signals (CHS 0~4) and the highway clock (C2M) presented by the CPU CARD.

■ **CPU Interface Circuit**

Composition:

IC1, IC2, IC3, IC4, IC5, IC7, IC9, IC10, IC12

Circuit Operation:

As the address bus and the data bus are multiplied in the MODEM IC, this circuit makes the address bus and the data bus to be multiplied.

REMOTE CARD

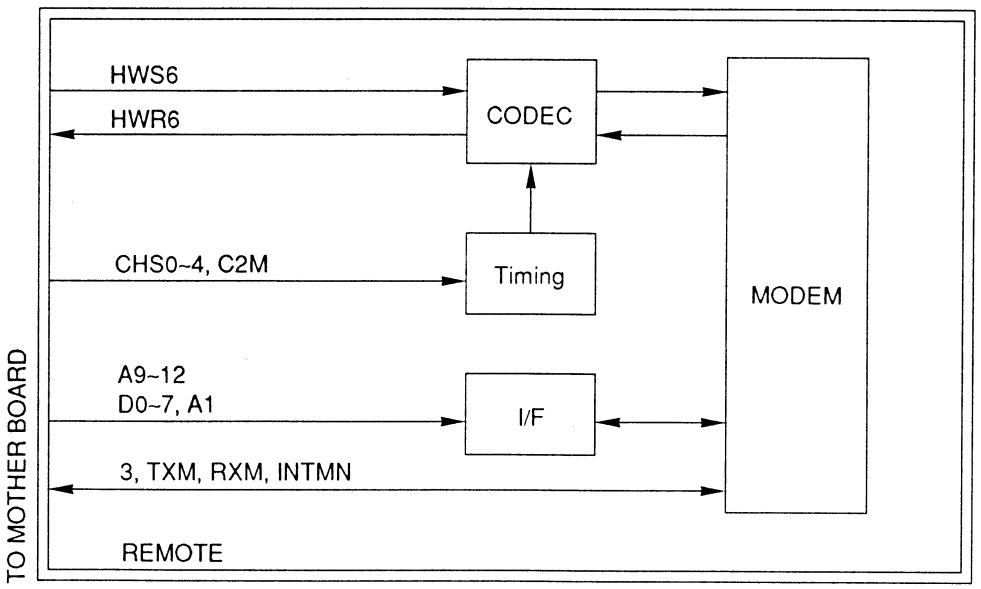

5) DISA CARD (KX-TD191)

DISA CARD consists of the following.
CPU Circuit
Parallel FIFO (First In First Out) Memory Circuit
ADPCM CODEC Circuit
OGM (Out Going Message) Memory Circuit
DTMF Repeat Circuit
End of Call Detection Circuit
Highway Control Circuit
Timing Signal Generator Circuit

■ CPU Circuit

Composition:

68C03	8 bit CPU (IC1)
ROM	32 kbite (IC2)
SRAM	8 kbit (IC3)

IC7, IC25, IC27, IC32, IC36, IC46

Circuit Operation:

This circuit is a circuit which controls the DISA CARD according to the program in the ROM (IC2) by the CPU (IC1). It is connected with main CPU on CPU CARD through the Parallel FIFO Circuit, and controls this card by following the commands from the main CPU.

■ Parallel FIFO Memory Circuit

Composition:

Gate Array (IC5)
IC6, IC37, IC38, IC39, IC40, IC41

Circuit Operation:

Parallel FIFO Memory Circuit is a circuit which functions the data communication interface between the DISA-CPU and the main CPU on CPU CARD. This circuit has each 16 bite buffer in the up and down directions.
This FIFO memory is functioned by Gate Array (IC5).

■ ADPCM CODEC Circuit

Composition:

ADPCM IC	(IC53, IC54)
CODEC IC	(IC57, IC58, IC61)
AGC Circuit	(IC70, Q7, Q8, etc.)
Path Selector	(IC37, IC38, IC42, IC43, IC)

Circuit Operation:

This circuit is a circuit which converts the ADPCM data of OGM (Out Going Message) stored in RAM (IC48, IC49) into the PCM CODEC data, and presents to UHW 0 of the up highway.
Two of this circuit are installed on one card, and one of them has the OGM recording function as well. In another words, it takes in the PCM CODEC data on DHW 6 of the down highway through the AGC circuit and converts to the ADPCM codes.
The data transmission between this circuit and RAM (IC48, IC49) is done by CPU (IC1). The transmitting rate is 1 Bite/250 μS. This circuit is composed of the ADPCM IC with serial/parallel converter and parallel/serial converter (IC53, IC54), CODEC IC (IC57, IC58, IC61) and the AGC Circuit (only one circuit).
The coding rate of ADPCM is 32 Kbps.

■ **OGM Memory Circuit**

Composition:

SRAM 2 Mbit (IC48, IC49)
Battery (BAT), etc.

Circuit Operation:

This circuit is RAM (IC48, IC49) which is stored the ADPCM data of OGM by CPU (IC1). With 2 Mbit capacity, two messages each for 32 seconds can be recorded. This circuit is backed up by battery (BAT).

■ **DTMF Repeat Circuit**

Composition:

CODEC IC (IC20, IC21)
Filter IC (IC13, IC14)
DTMF Transceiver IC (IC9, IC10)

Circuit Operation:

This circuit is a circuit which receives the DTMF signal (IC9, 10) through the highway (IC20–IC13, IC21–IC14) once and resends (IC9, 10) to the highway (IC20, IC21) to cover the level reduction of the DTMF tone caused by the line loss during CO-CO call. Normaly, output of this circuit is open, and once it detects the DTMF signal (IC9, 10) at CO-CO call, the output connects with UHW 6 of the up highway and then resends the DTMF signal (IC9, 10).
Also this circuit is used as the DTMF receiver (IC9, 10), and receives the secondary dial when the DISA signal incoming.
Two of this circuit are installed on one card (TS16, TS18 of DHW6).

■ **End of Call Detection Circuit**

Composition:

PI0 (IC4)
IC24, IC26, IC28, IC30, etc.

Circuit Operation:

This circuit is a circuit which detects the end of call at CO-CO call.
It converts whether the voice exits or not into the logic level (IC24, 26, 28, 30), then presents it to CPU (IC1) through P10 (IC4). There are three methods for detecting the end of call as follows.

- No tone detection
- Cyclic tone detection
- Continuous tone detection

The four of this circuit are installed corresponding to each time slot of TS16~19.

■ **Highway Control Circuit**

Composition:

IC37, IC42, IC43, IC67, IC71

Circuit Operation:

This circuit is a circuit which transfers the data in the HWS 6 of the down highway onto HWR 6 of the up highway for calling between CO and CO. TS16~19 are controlled individually.
The CPU (IC1) controls the gate IC (IC34, 42, 43, 67, 71) through PI0 (IC4), connects DHW 6 and UHW 6.

■ **Timing Signal Generator Circuit**

Composition:

IC39, IC40, IC62, IC63, IC64, IC65

Circuit Operation:

This circuit is a circuit which generates the timing signals for using for ADPCM, CODEC Circuit and Highway Control Circuit. These signals are generated from the channel select signals (CH0~4) and the highway clock (C2M, C4MN) which are presented from the CPU CARD.

DISA BLOCK DIAGRAM

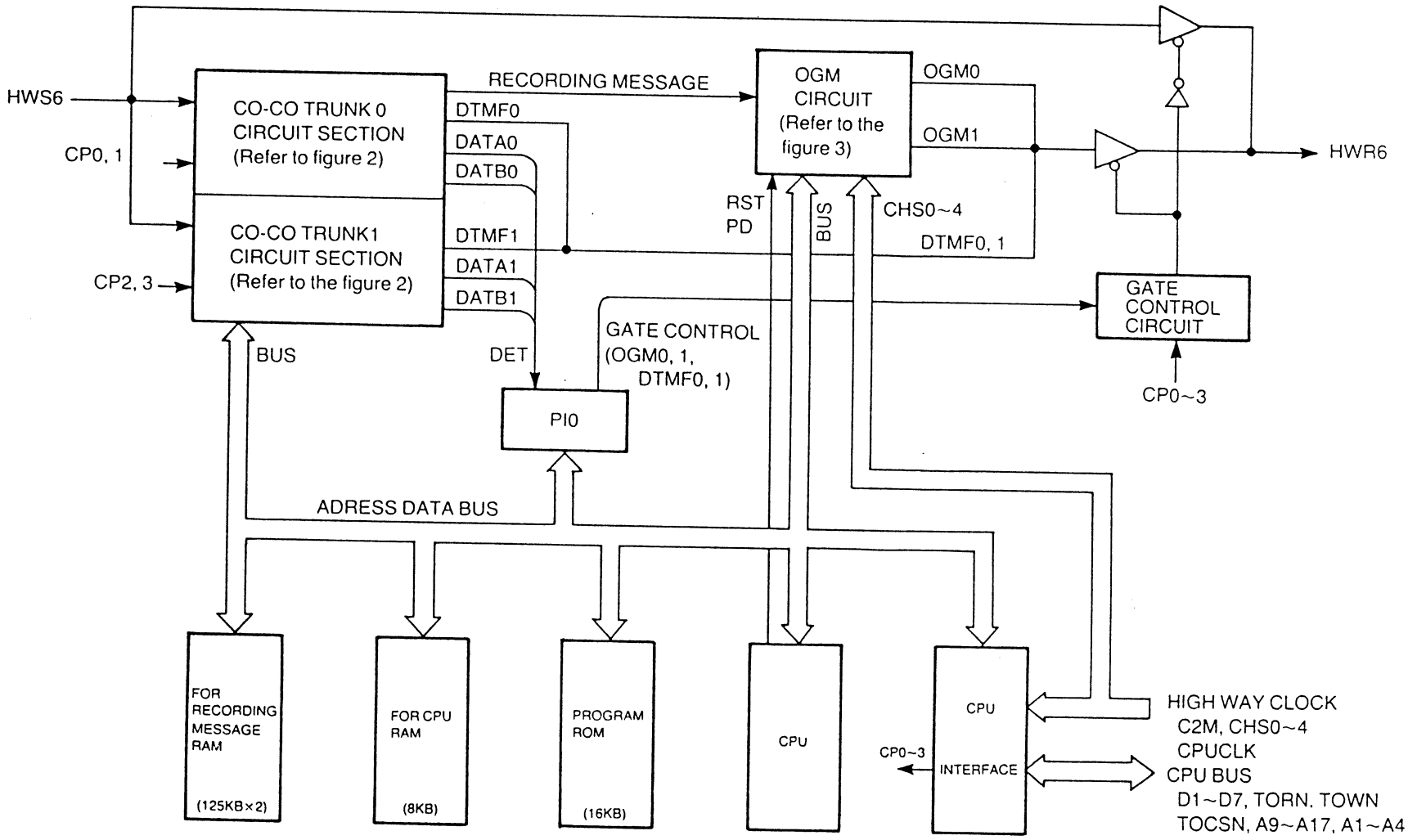

Figure 1

CO-CO TRUNK 0, 1 CIRCUIT

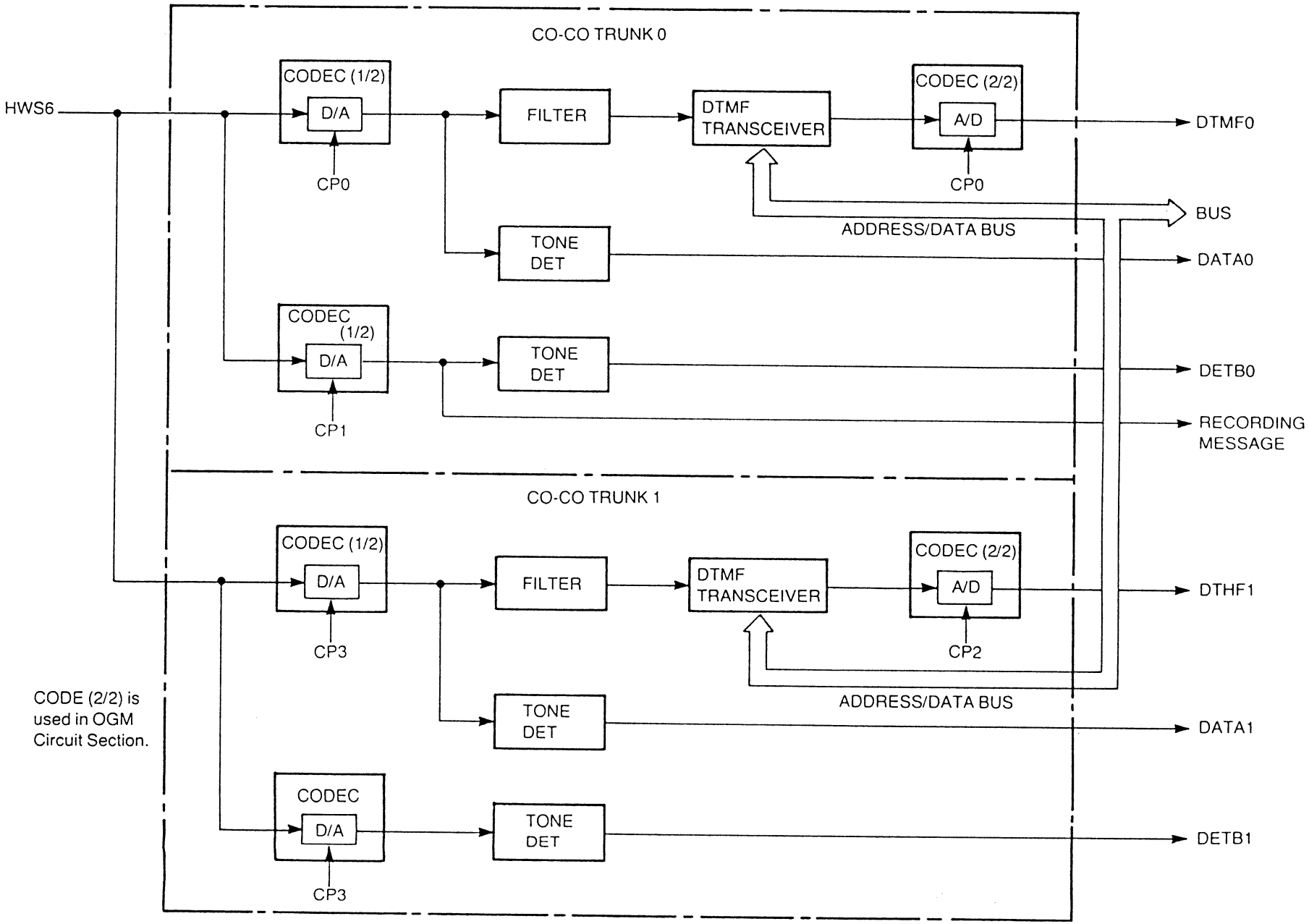

OGM CIRCUIT SECTION

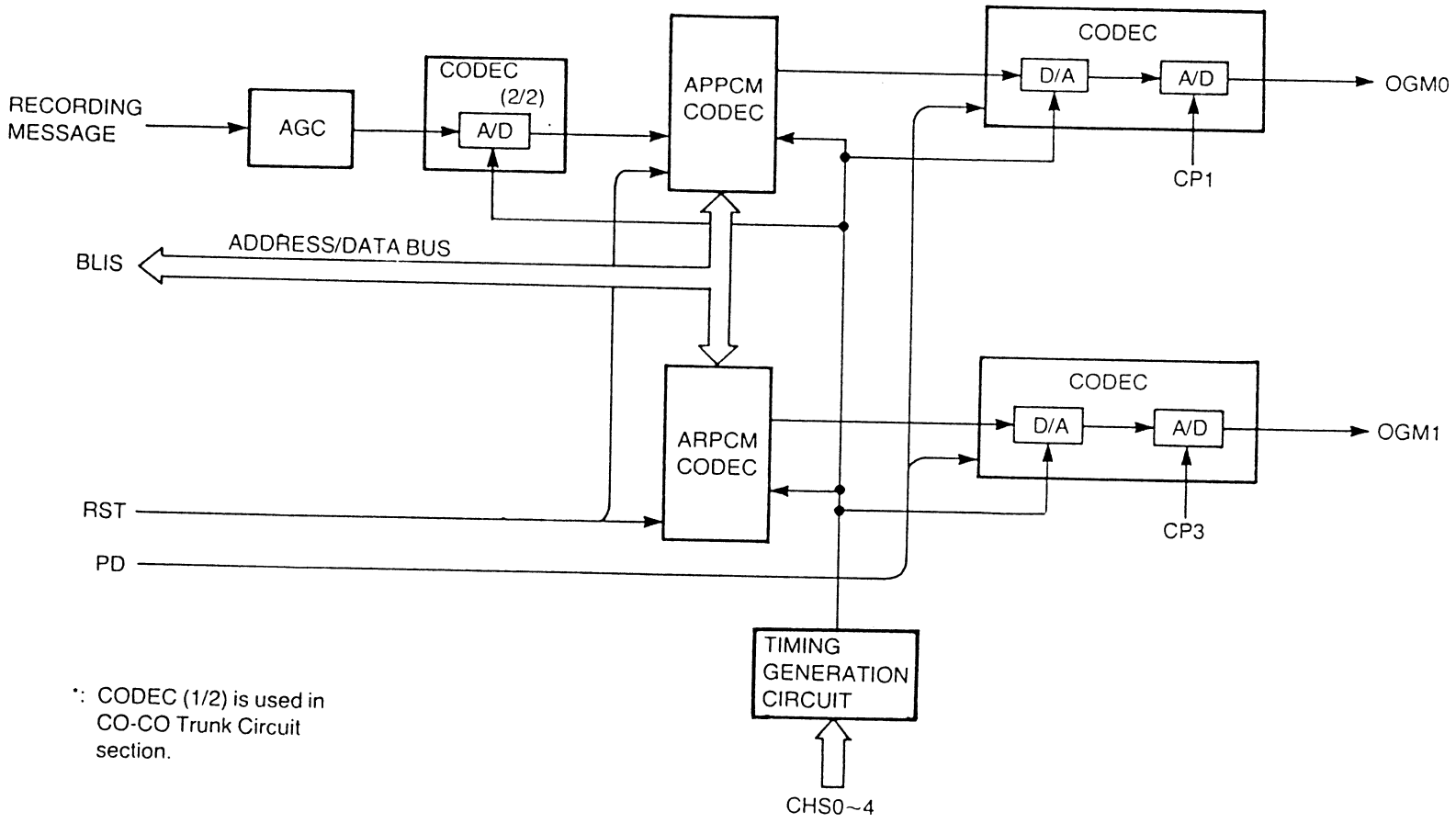

*: CODEC (1/2) is used in CO-CO Trunk Circuit section.

6) SYSTEM INTERCONNECTION CARD (KX-TD192)

SIC CARD consists of the following.
HDLC Controller
Timing Signal Generator Circuit
Sending and Receiving Circuit
Clock Guard Circuit

■ HDLC Controller

Composition:
HDLC Controller IC (IC115)

Circuit Operation:
HDLC Controller is a circuit which performs the conversion of the data format according to the HDLC protocol between main CPU on CPU CARD and the PCM highway connected with another system. It works as the serial/parallel converter at the same time.

■ Timing Signal Generator Circuit

Composition:
IC117, IC119

Circuit Operation:
This circuit generates the frame pulse which are presented to the another system, and also generates the signals for the data transmission between the HDLC controller and the PCM highway. These signals are generated from the channel select signals (CHS0-4) and the highway clock (C2M, C4MN) presented by the CPU CARD.

■ Sending and Receiving Circuit

Composition:
IC107, IC108, IC109, etc.

Circuit Operation:
This circuit sends the PCM highway, the highway clock and the frame pulse from the system to the another system (IC109), and receives those signals from the another system (IC108). Interface is RS-422.

■ Clock Guard Circuit

Composition:
IC121, IC122, etc.

Circuit Operation:
This circuit watches the PCM highway clock, the highway clock and the frame pulse from another system.

SYSTEM CONNECTION CARD

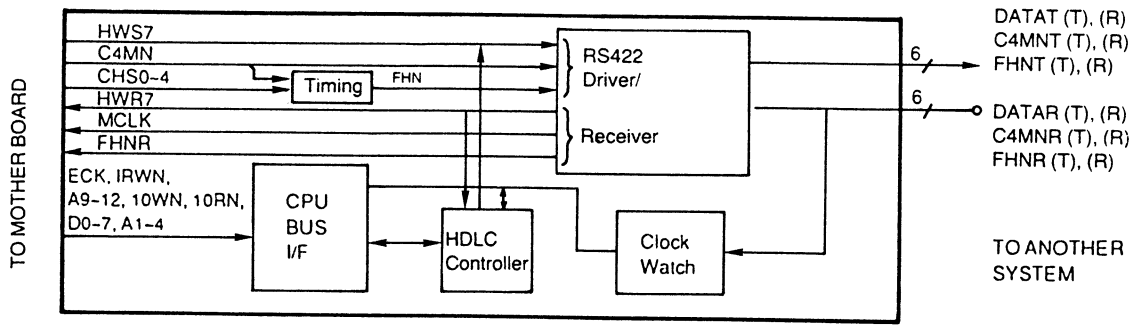

7) CALLER ID CARD (KX-TD193)

CALLER ID CARD consists of the following:
MODEM Signal Receiver Circuit
Serial/Parallel Converter Circuit
Over Voltage Protector Circuit

■ MODEM Signal Receiver Circuit

Composition:
IC301, IC302, IC303, IC304, etc.

Circuit Operation:
This circuit converts the MODEM signals sent between the bell signals into the serial signals. The baud rate of the MODEM signals is 300 bps. This circuit is composed of one IC (IC301, IC302, IC303, IC304), and four of this circuit are installed corresponding to each CO line.

■ Serial/Parallel Converter Circuit

Composition:
IC305, IC306, etc.

Circuit Operation:
This circuit converts the serial data presented from the MODEM signal demodulator into the parallel data for the main CPU to read them.
Four of this circuit are installed corresponding to each CO line. Two of this circuit are incorporated in one IC.

■ Over Voltage Protector Circuit

Composition:
D301~316 etc.

Circuit Operation:
This circuit protects the MODEM receiver from the bell signal on the CO line.

CALLER ID CARD

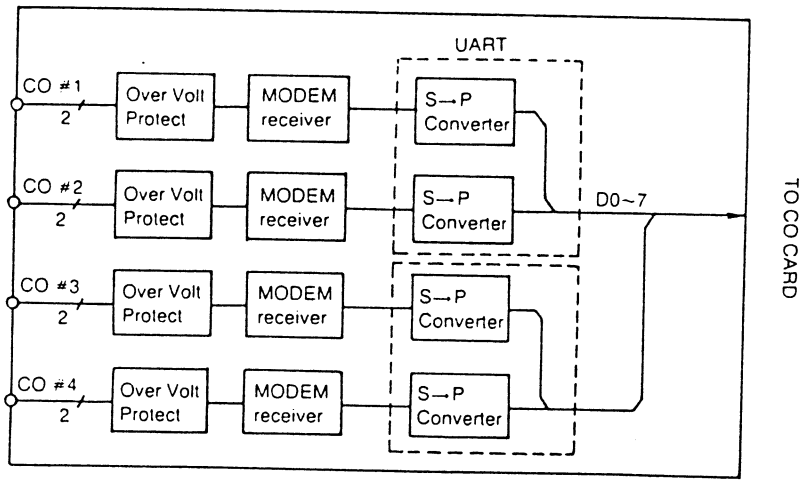

TROUBLESHOOTING GUIDE

1. NO OPERATION (Check Power Unit, CPU Board)

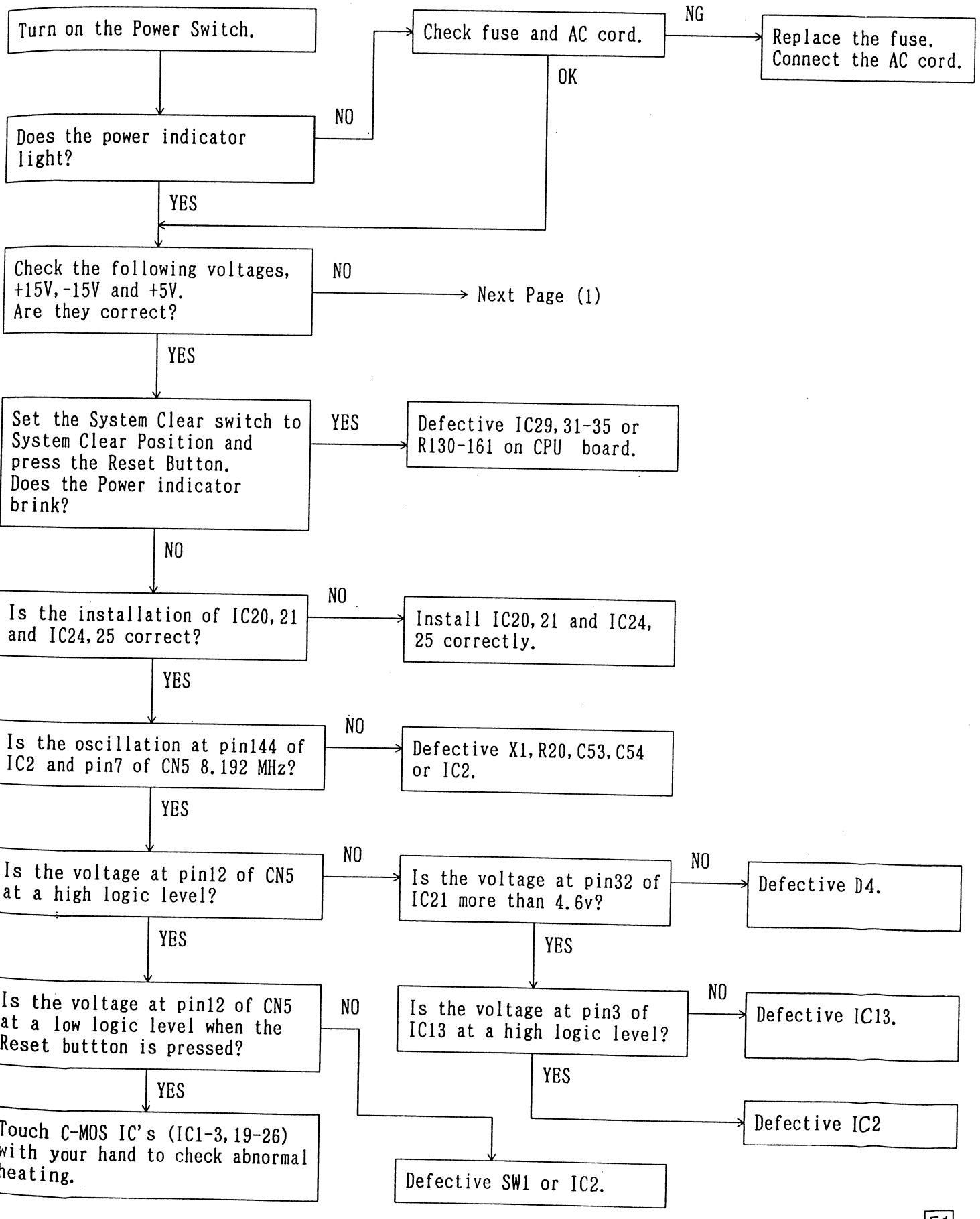

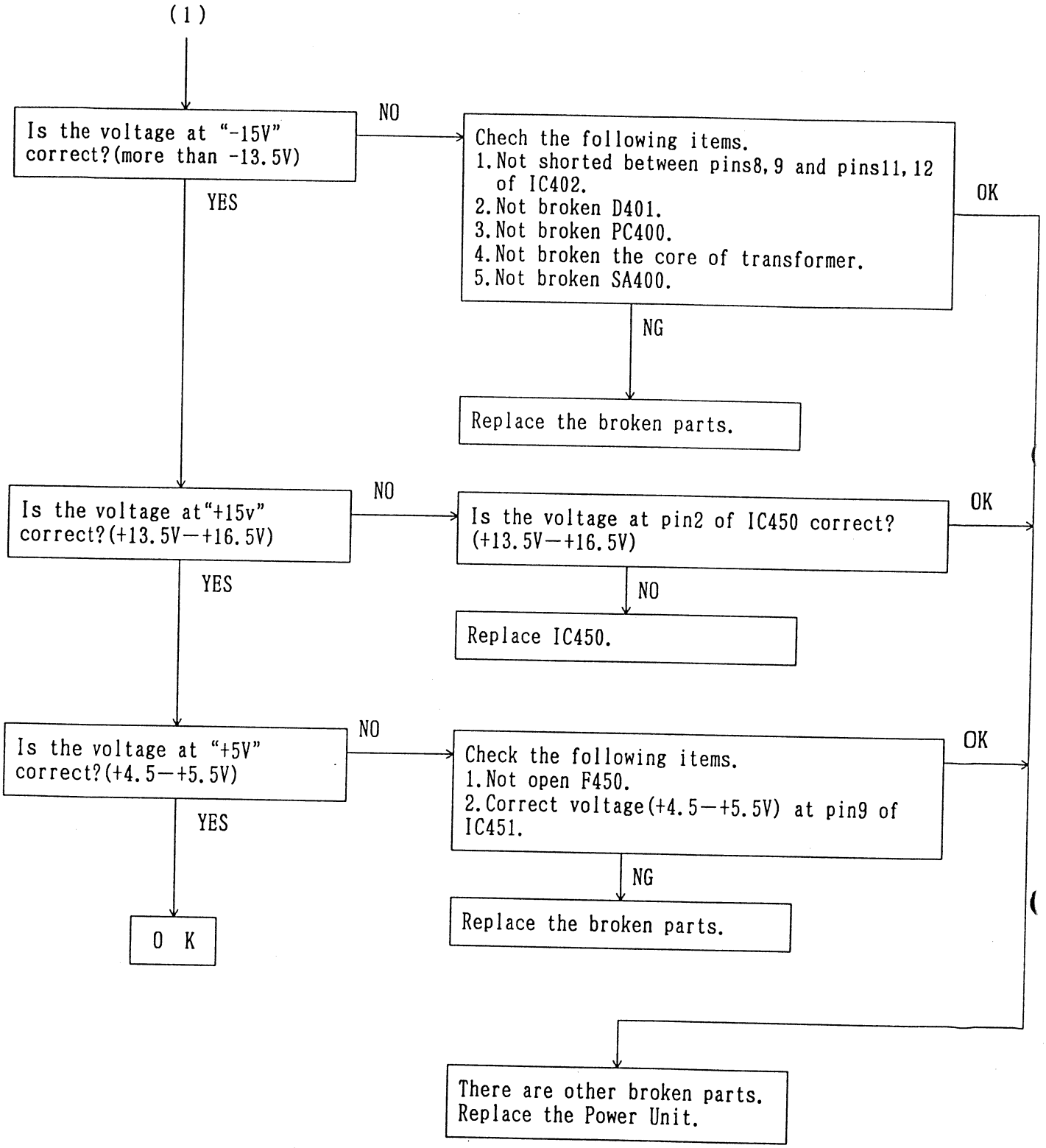
(1)
Is the voltage at "-15V" correct?(more than -13.5V)
NO
Chech the following items.
1.Not shorted between pins8,9 and pins11,12 of IC402.
2.Not broken D401.
3.Not broken PC400.
4.Not broken the core of transformer.
5.Not broken SA400.
OK
NG
Replace the broken parts.
YES
Is the voltage at"+15v" correct?(+13.5V—+16.5V)
NO
Is the voltage at pin2 of IC450 correct? (+13.5V—+16.5V)
OK
NO
Replace IC450.
YES
Is the voltage at "+5V" correct?(+4.5—+5.5V)
NO
Check the following items.
1.Not open F450.
2.Correct voltage(+4.5—+5.5V) at pin9 of IC451.
OK
NG
Replace the broken parts.
YES
O K
There are other broken parts.
Replace the Power Unit.

2. NO DIAL TONE (Check Extension Board)

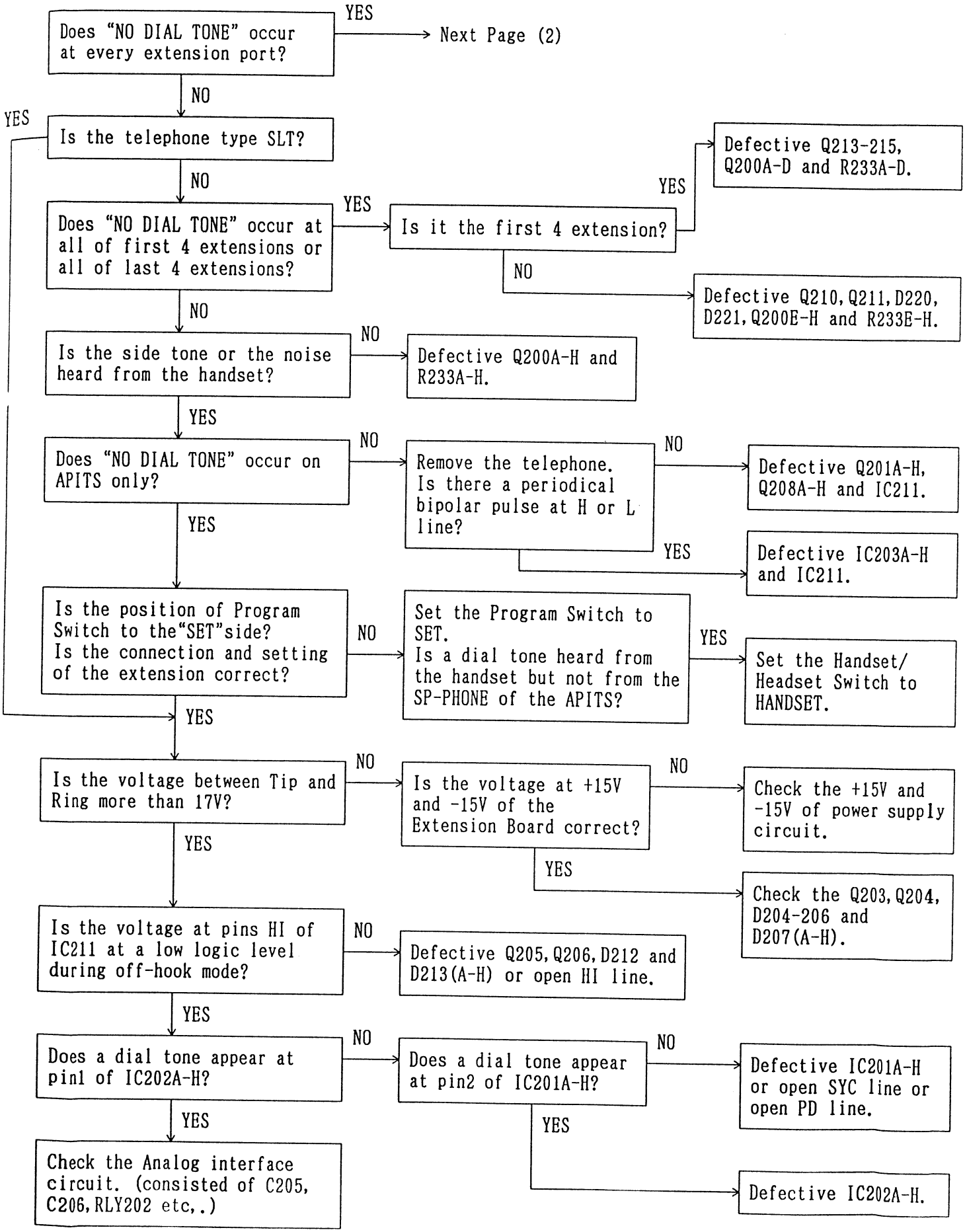

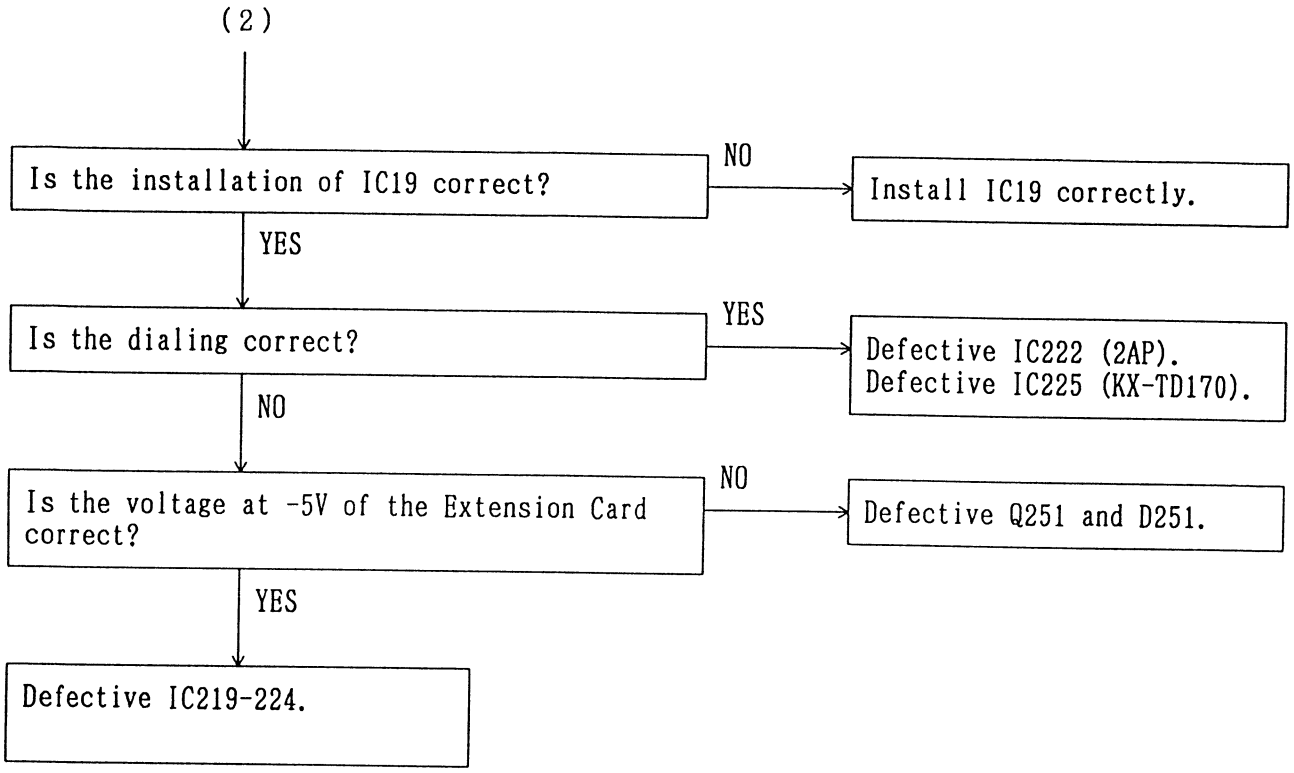
(2)
Is the installation of IC19 correct?
NO
Install IC19 correctly.
YES
Is the dialing correct?
YES
Defective IC222 (2AP).
Defective IC225 (KX-TD170).
NO
Is the voltage at -5V of the Extension Card correct?
NO
Defective Q251 and D251.
YES
Defective IC219-224.

3. CAN NOT DIAL (Check Extension Board)

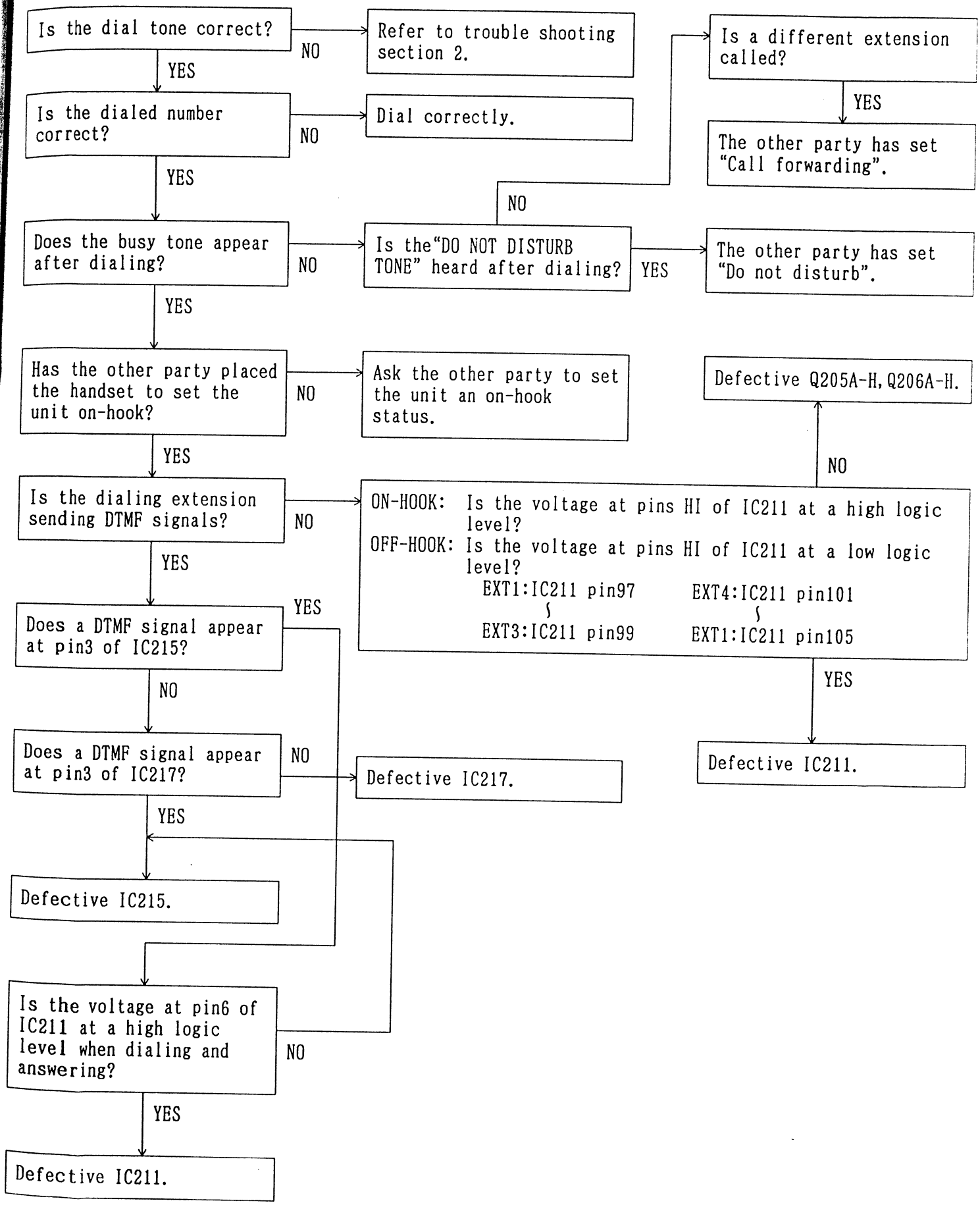

4. CAN NOT ACCESS AN EXTENSION (Check Extension Board, Power Unit and CPU Board)

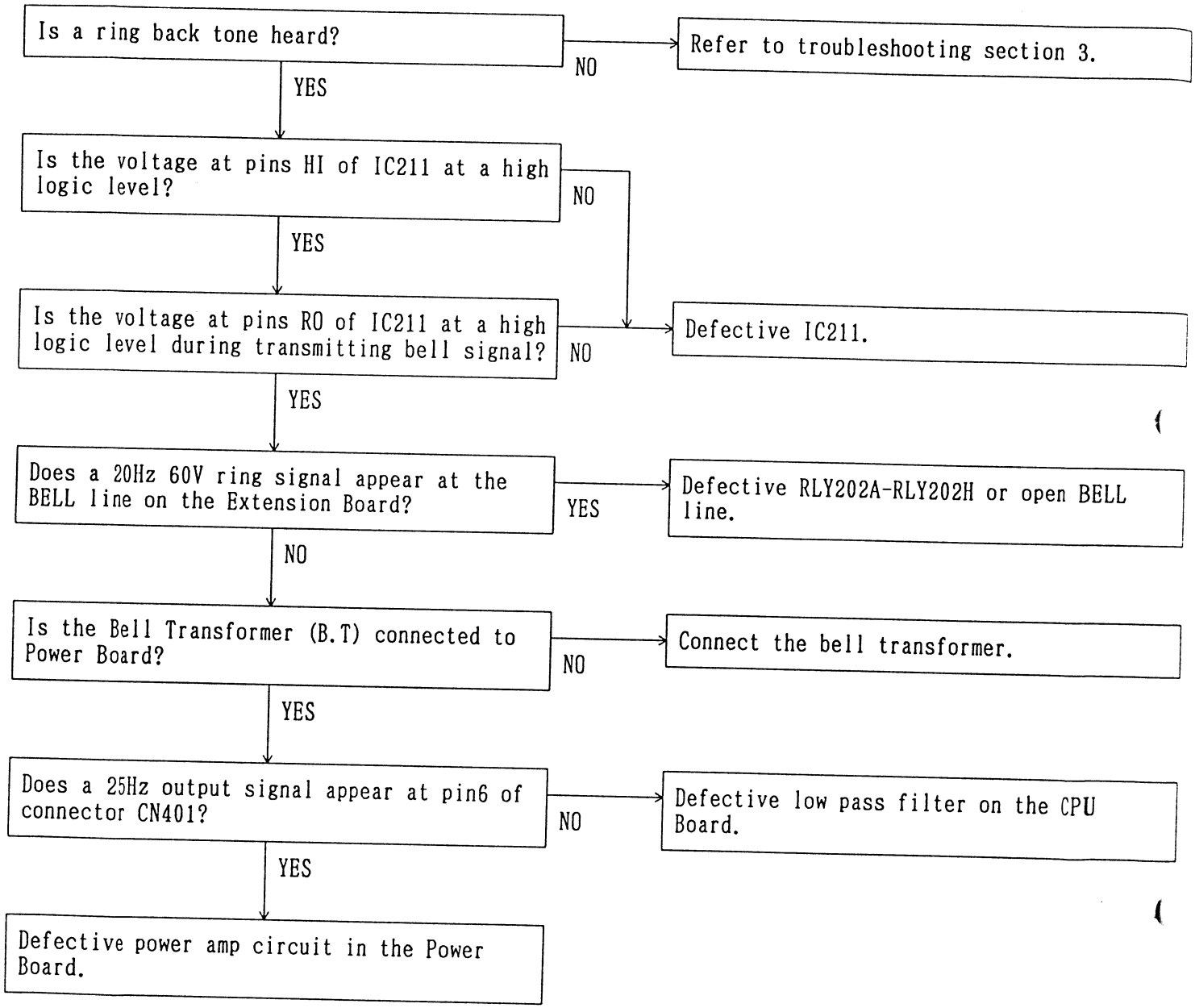

5. CAN NOT SEND A HOLD TONE (Check CPU Board)

5-1 Hold Tone to COL

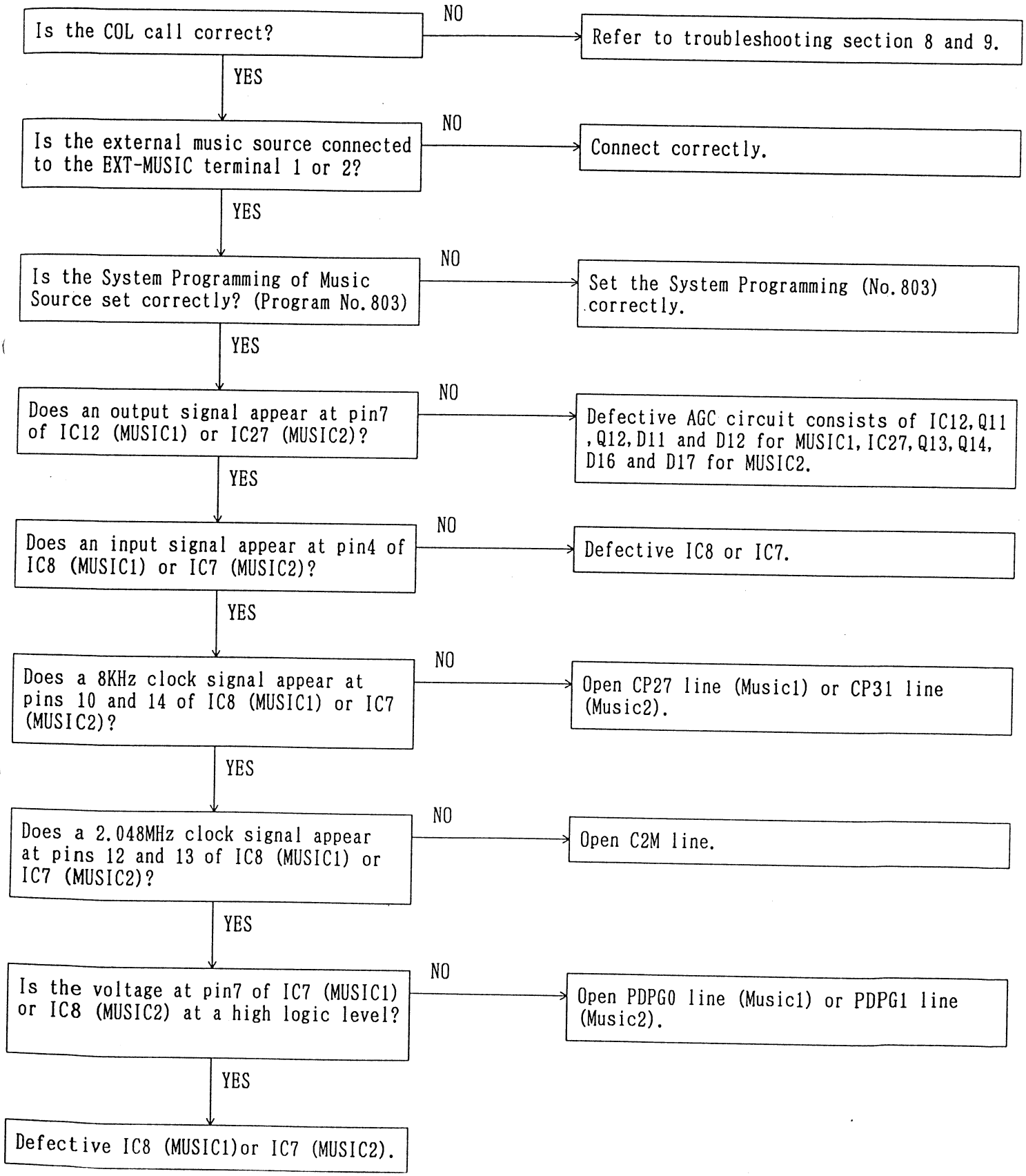

5-2 BGM (Back Ground Music)

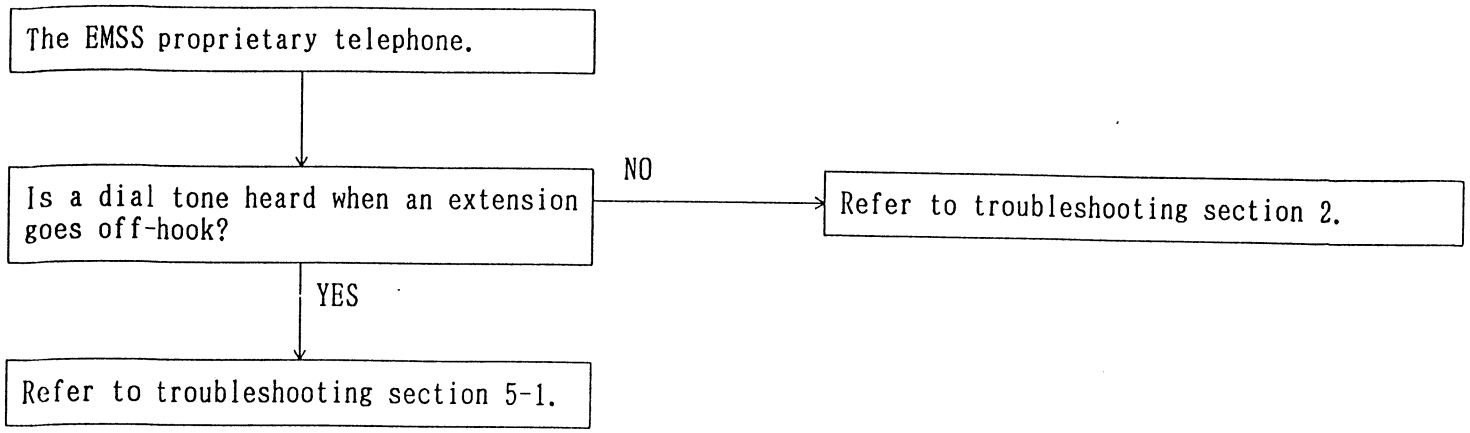

6. TOO MUCH NOISE LEBEL WITH INTERCOM (HUM)
(Check Power, Extension and CO Board)

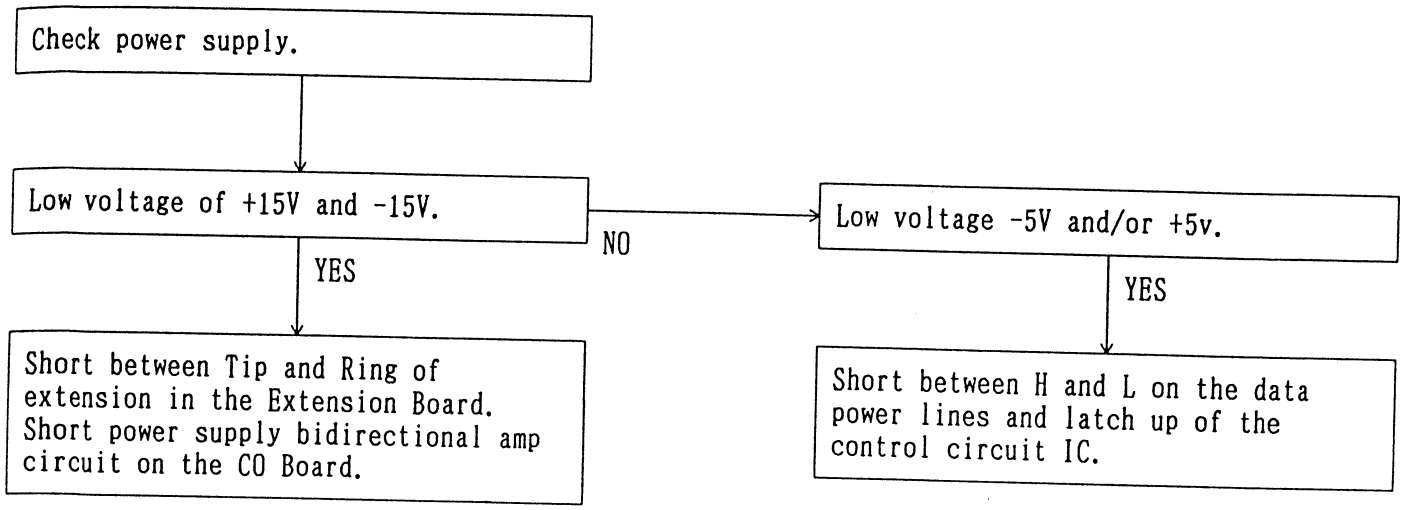

7. COL LINE'S RELEASED DURING A CALL (Check CO Board)

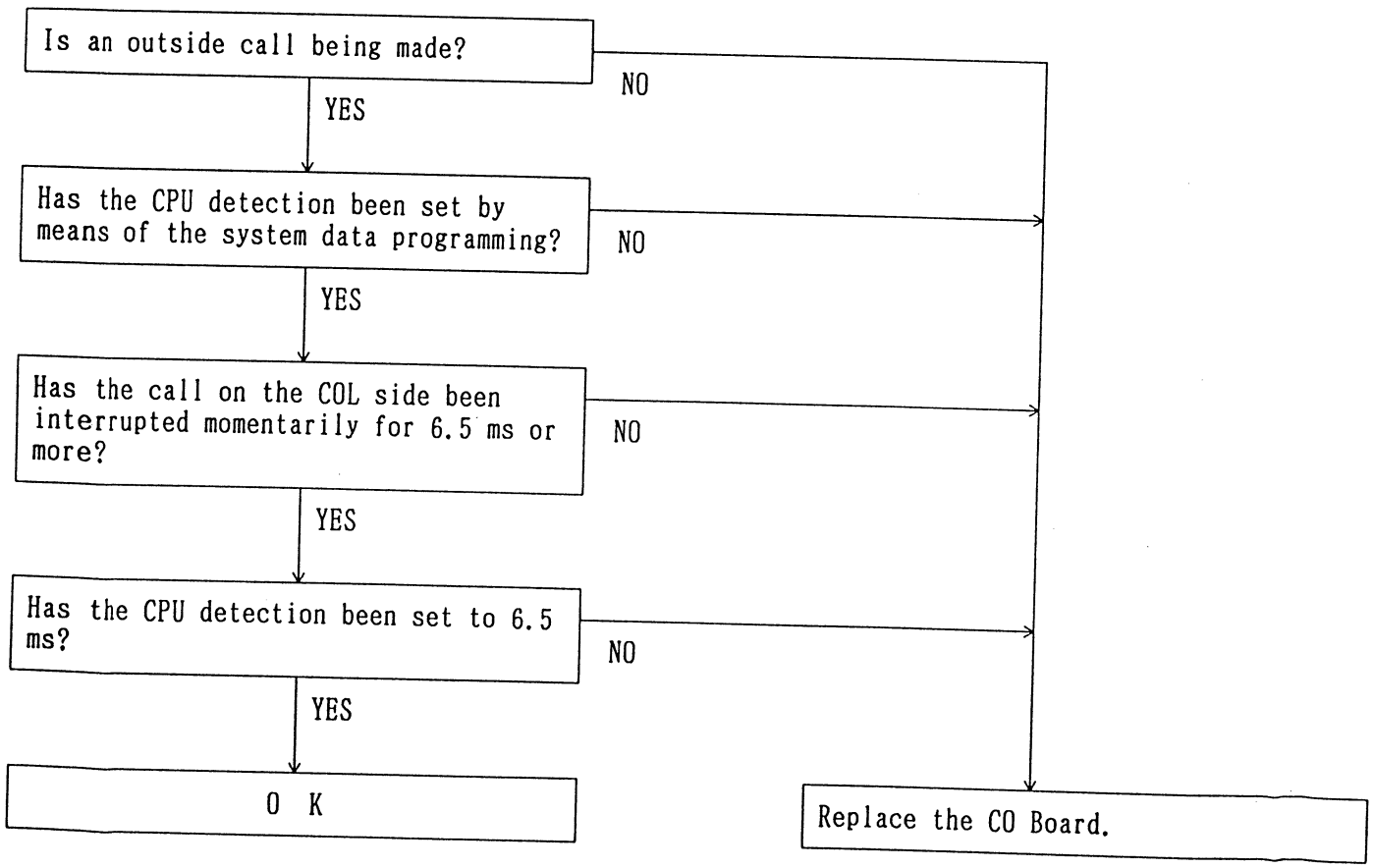

8. CAN NOT RECEIVE COL DIAL TONE (Check CO Board)

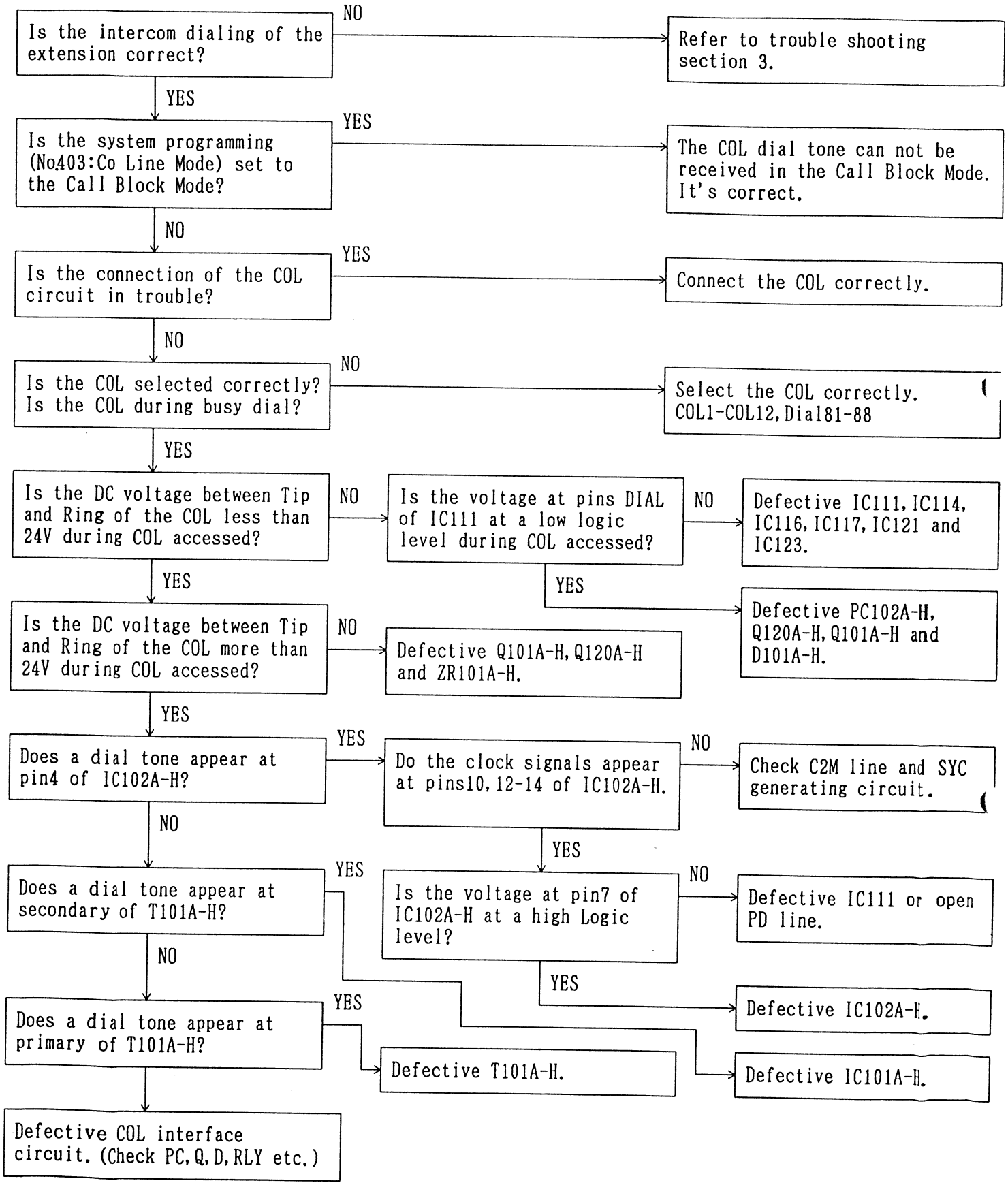

9. CAN NOT SEND DTMF TONES (Check CO Board)
(When Pulse/Tone conversion, Speed dial, One touch dial, Redial)

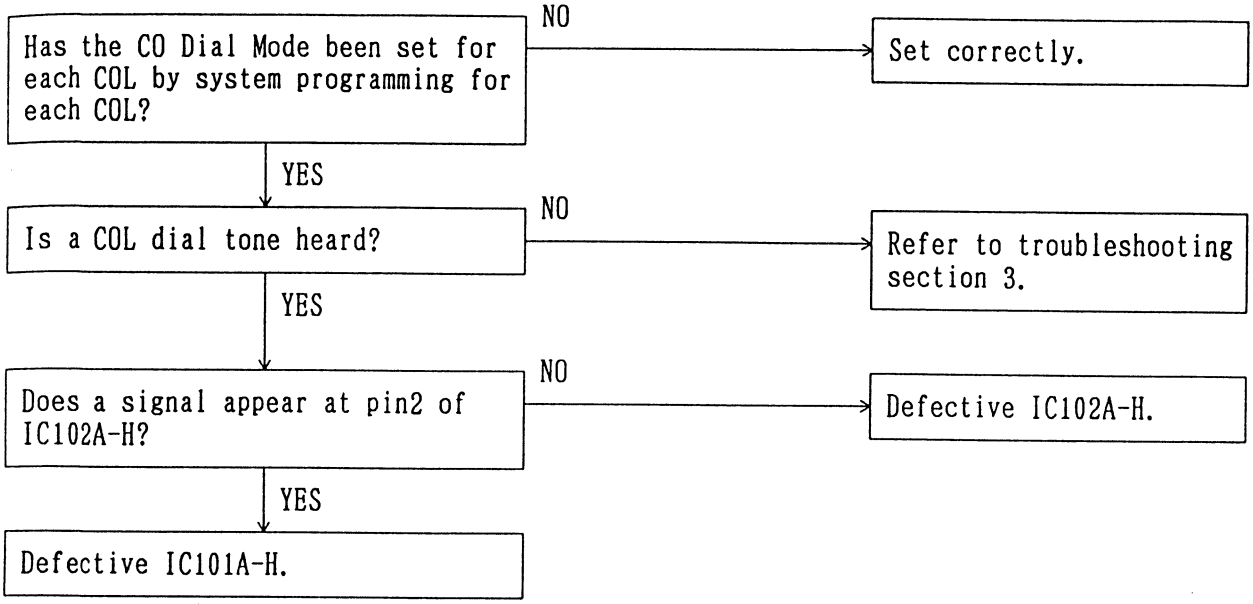

10. EXTENSION IS NOT RINGING WHILE BEING CALLED FROM A COL LINE (Check CO Board)

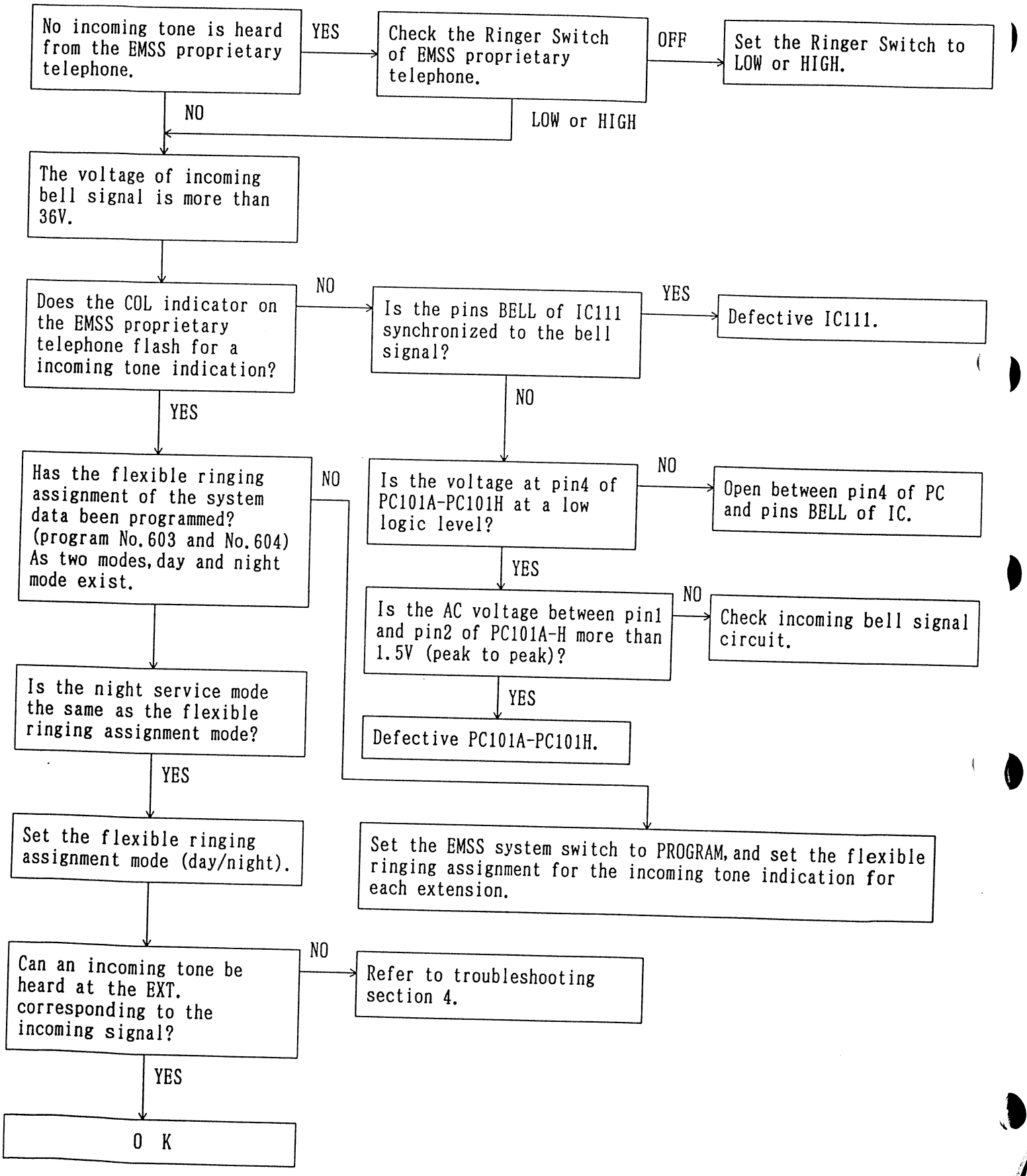

MEMO

DIAGNOSTIC METHOD

1. HOW TO GET INTO SELF-DIAGNOSTIC MODE

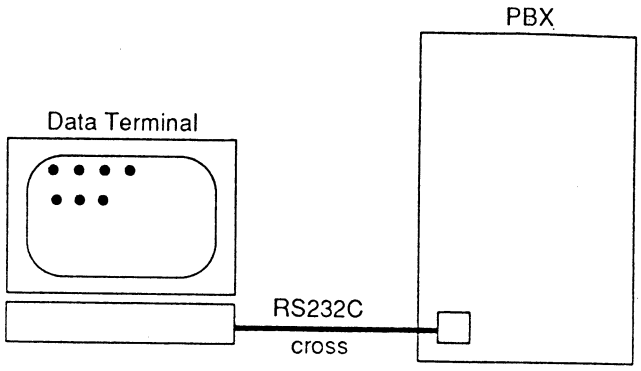

(1) Set the main power switch to ON. (PBX and Data Terminal)
(2) Connect the Data Terminal to the RS232C of PBX and press the return key of the Data Terminal in 10 seconds.
(3) After message is displayed, enter password and press the return key.

Ex.)

```
Welcome to KX-TD1232 Ver. 2.0 Panasonic CO., LTD
Enter Password
??????↓
```

(4) After response message is received, enter diagnostic mode shift command "DAG".

Ex.)

```
EIA Mode Start
DAG↓
```

(5) After response message is received, diagnostic command can be used.

Ex.)

```
DIAG Mode Start
```

* Setting of RS-232C communication parameter

Return Cord: CL+LF
Borate: 9600bps
Data : 8 bit
Parity Bit: None
Stop Bit: 1 bit

2. TEST ITEMS

No.	Test Items	Test Method	Check Items
1	DTMF G/R Test	1) Enter "M1 1" from the data terminal. 2) Enter "M1 2" from the data terminal.	1) Make sure response is "OK 00". 2) Make sure response is "OK 00".
2	Extension Card Test [Digital Channel Loop Back]	1) Enter "M3 1,0" from the data terminal 2) Enter "M3 2, 0" from the data terminal.	1) Make sure response is "OK 0000". 2) Make sure response is "OK 0000".
3	Extension Card Test [Digital Data Loop Back]	1) Enter "M4 1" from the data terminal. 2) Enter "M4 2" from the data terminal.	1) Make sure response is "OK 00". 2) Make sure response is "OK 00".
4	CO Line Card Test [Analogue Channel Loop Back]	1) Enter "M5 0" from the data terminal.	1) Make sure response is "OK 00".
5	CO Line Card Test [Diagnostic Relay turn]	1) Enter "M6 0" from the data terminal.	1) Make sure response is "OK 00 00 00 00 00".
6	Doorphone Card Test	1) Enter "M9" from the data terminal.	1) Make sure response is "OK 00".
7	Conference Trunk Test	1) Enter "MC" from the data terminal.	1) Make sure response is "OK 3F".

HOW TO REPLACE FLAT PACKAGE IC

■ PREPARATION

- SOLDER ..... Sparkle Solder 115A-1, 115B-1
  OR
  Almit Solder KR-19, KR-19RMA
- Soldering iron ..... Recomended power consumption will be between 30w to 40w.
  Temperature of Copper Rod 662 ±50° F (350 ±10° C)

  (An expert may handle 60~80w iron, but beginner might damage foil by overheating)
- Flux ..... HI115 Specific gravity 0.863

  (Original flux will be replaced daily.)

■ PROCEDURE

1. Temporary fix FLAT PACKAGE IC by Soldering on marked 2pins.

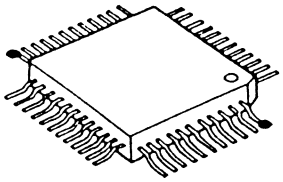

●.....Temporary soldering point.

*Most important matter is accurate setting of IC to the corresponding soldering foil.

2. Apply flux for all pins of FLAT PACKAGE IC.

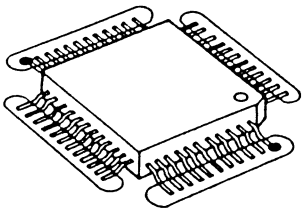

.....Flux

3. Solder employing specified solder to direction arrow, as slide the soldering iron.

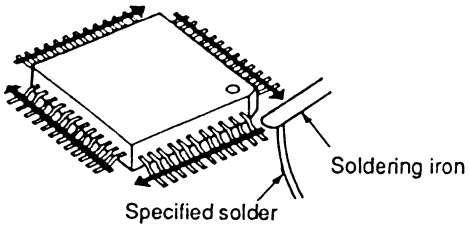

■ MODIFICATION PROCEDURE OF BRIDGE

1. Re-solder slightly on bridging portion.
2. Remove remained solder along pins employing soldering iron as shown in below Figure.

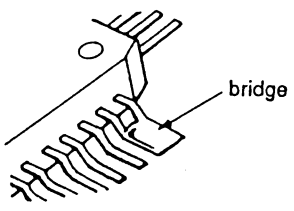

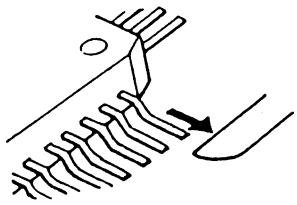

EXPLANATION OF CONNECTORS

CN402

Pin	Signal Name	I/O	ACT (H/L)
1	FHNR	I	L
2	HALTN	O	L
3	INTMN	I	L
4	RXD	I	H/L
5	TXD	O	H/L
6	ECK	O	H
7	IRWN	O	H/L
8	SRSTN	O	L
9	IOWN	O	L
10	IORN	O	L
11	IOCSN	O	L
12	CHS4	O	H/L
13	CHS3	O	H/L
14	CHS2	O	H/L
15	CHS1	O	H/L
16	CHS0	O	H/L
17	GND	---	---
18	GND	---	---
19	MCLK	I	H/L
20	CPUCKN	O	H/L
21	C4M	O	H/L
22	C2MN	O	H/L
23	---	---	Not Used
24	GND	---	---
25	A12N	O	H/L
26	A11N	O	H/L
27	A10N	O	H/L
28	A9N	O	H/L
29	A6N	O	H/L
30	A5N	O	H/L
31	A4N	O	H/L
32	A3N	O	H/L
33	A2N	O	H/L
34	A1N	O	H/L
35	D7N	B	H/L
36	D6N	B	H/L
37	D5N	B	H/L
38	D4N	B	H/L
39	D3N	B	H/L
40	D2N	B	H/L
41	D1N	B	H/L
42	D0N	B	H/L
43	HWR7	I	H/L
44	HWS7	O	H/L
45	HWR6	I	H/L
46	HWS6	O	H/L
47	HWR5	I	H/L
48	HWS5	O	H/L
49	HWR4	I	H/L
50	HWS4	O	H/L
51	HWR3	I	H/L
52	HWS3	O	H/L
53	HWR2	I	H/L
54	HWS2	O	H/L
55	HWR1	I	H/L
56	HWS1	O	H/L
57	GND	---	---
58	OHCAR	---	---
59	5	---	---
60	OHCAT	---	---
61	-15	---	---
62	GND	---	---
63	15	---	---
64	BELLS	O	---

CN401

Pin	Signal Name	I/O	ACT (H/L)
1	+15V	---	---
2	-15V	---	---
3	+5V	---	---
4	GND	---	---
5	GND	---	---
6	BELLS	---	---
7	BELL	---	---

CN9

Pin	Signal Name	I/O	ACT (H/L)
1	C2M	O	H/L
2	MU/A	O	H/L
3	HWS0	O	H/L
4	HWR0	I	H/L
5	CP29	O	H
6	CP30	O	H
7	D0	B	H/L
8	D1	B	H/L
9	D2	B	H/L
10	D3	B	H/L
11	D4	B	H/L
12	D5	B	H/L
13	GND	---	---
14	PIGN	O	L
15	POGN	O	L
16	+15V	---	---
17	-15V	---	---
18	5	---	---
19	-5	---	---
20	FG	---	---

CN11

Pin	Signal Name	I/O	ACT (H/L)
1	SD	O	12
2	RD	I	12
3	ER	O	12
4	DR	I	12
5	SG	---	---
6	FG	---	---

CN4

Pin	Signal Name	I/O	ACT (H/L)
1	LED1	---	---
2	LED2	O	L

CN411

Pin	Signal Name	I/O	ACT (H/L)
1	GND	---	---
2	GND	---	---
3	FHNR	O	L
4	ECK	I	H
5	SRSTN	I	L
6	IOWN	I	L
7	IRWN	I	H/L
8	IOCSN	I	L
9	CHS4	I	H/L
10	CHS3	I	H/L
11	CHS2	I	H/L
12	CHS1	I	H/L
13	CHS0	I	H/L
14	GND	---	---
15	MCLK	O	H/L
16	CPUCKN	I	H/L
17	C4M	I	H/L
18	C2MN	I	H/L
19	GND	---	---
20	A5N	I	H/L
21	A12N	I	H/L
22	A11N	I	H/L
23	A10N	I	H/L
24	A9N	I	H/L
25	A4N	I	H/L
26	A3N	I	H/L
27	A2N	I	H/L
28	A1N	I	H/L
29	D7N	B	H/L
30	D6N	B	H/L
31	D5N	B	H/L
32	D4N	B	H/L
33	D3N	B	H/L
34	D2N	B	H/L
35	D1N	B	H/L
36	D0N	B	H/L
37	HWR7	O	H/L
38	HWS7	I	H/L
39	GND	---	---
40	+5V	---	---

CN410

Pin	Signal Name	I/O	ACT (H/L)
1	INTMN	O	L
2	RXD	O	H/L
3	TXD	I	H/L
4	SRSTN	I	L
5	IOW	I	L
6	IORN	I	L
7	IOCSN	I	L
8	CHS4	I	H/L
9	CHS3	I	H/L
10	CHS2	I	H/L
11	CHS1	I	H/L
12	CHS0	I	H/L
13	A2N	I	H/L
14	C2MN	I	H/L
15	A12N	I	H/L
16	A11N	I	H/L
17	A10N	I	H/L
18	A9N	I	H/L
19	A1N	I	H/L
20	D7N	B	H/L
21	D6N	B	H/L
22	D5N	B	H/L
23	D4N	B	H/L
24	D3N	B	H/L
25	D2N	B	H/L
26	D1N	B	H/L
27	D0N	B	H/L
28	HWR6	O	H/L
29	HWS6	I	H/L
30	GND	---	---
31	5	---	---
32	GND	---	---
33	-15V	---	---
34	+15V	---	---

CN409

Pin	Signal Name	I/O	ACT (H/L)
1	GND	---	---
2	GND	---	---
3	GND	---	---
4	GND	---	---
5	HALTN	I	L

Pin	Signal Name	I/O	ACT (H/L)
6	SRSTN	I	L
7	IOWN	I	L
8	IORN	I	L
9	IOCSN	I	L
10	CHS4	I	H/L
11	CHS3	I	H/L
12	CHS2	I	H/L
13	CHS1	I	H/L
14	CHS0	I	H/L
15	GND	---	---
16	GND	---	---
17	CPUCKN	I	H/L
18	C4M	I	H/L
19	C2MN	I	H/L
20	GND	---	---
21	---	---	Not Used
22	---	---	Not Used
23	AN12N	I	H/L
24	AN11N	I	H/L
25	AN10N	I	H/L
26	A9N	I	H/L
27	A6N	I	H/L
28	A5N	I	H/L
29	A4N	I	H/L
30	A3N	I	H/L
31	A2N	I	H/L
32	A1N	I	H/L
33	D7N	B	H/L
34	D6N	B	H/L
35	D5N	B	H/L
36	D4N	B	H/L
37	D3N	B	H/L
38	D2N	B	H/L
39	D1N	B	H/L
40	D0N	B	H/L
41	HWR6	O	H/L
42	HWS6	I	H/L
43	GND	---	---
44	GND	---	---
45	+5V	---	---
46	+5V	---	---
47	-15V	---	---
48	-15V	---	---
49	+15V	---	---
50	+15V	---	---

CN405

Pin	Signal Name	I/O	ACT (H/L)
1	+15V	---	---
2	-15V	---	---
3	+5V	---	---
4	GND		---
5	IOCSN	I	L
6	SRSTN	I	L
7	CHS4	I	H/L
8	CHS3	I	H/L
9	CHS2	I	H/L
10	CHS1	I	H/L
11	CHS0	I	H/L
12	IOWN	I	L
13	IORN	I	L
14	C2MN	I	H/L
15	GND	---	---
16	A12N	I	H/L
17	A11N	I	H/L
18	A10N	I	H/L
19	A9N	I	H/L
20	A6N	I	H/L
21	A5N	I	H/L
22	A4N	I	H/L
23	A3N	I	H/L
24	A2N	I	H/L
25	A1N	I	H/L

Pin	Signal Name	I/O	ACT (H/L)
26	D7N	B	H/L
27	D6N	B	H/L
28	D5N	B	H/L
29	D4N	B	H/L
30	D3N	B	H/L
31	D2N	B	H/L
32	D1N	B	H/L
33	D0N	B	H/L
34	HWR1	O	H/L
35	HWS1	I	H/L
36	GND	---	---
37	GND	---	---
38	R4	---	---
39	GND	---	---
40	T4	---	---
41	GND	---	---
42	R3	---	---
43	GND	---	---
44	T3	---	---
45	RING	---	---
46	R2	---	---
47	TIP	---	---
48	T2	---	---
49	T1	---	---
50	R1	---	---

CN406/407/408

Pin	Signal Name	I/O	ACT (H/L)
1	GND	---	---
2	GND	---	---
3	FHNR	O	L
4	HALTN	I	L
5	ECK	I	H
6	IRWN	I	L
7	SRSTN	I	L
8	IOWN	I	L
9	IORN	I	L
10	IOCSN	I	L
11	CHS4	I	H/L
12	CHS3	I	H/L
13	CHS2	I	H/L
14	CHS1	I	H/L
15	CHS0	I	H/L
16	GND	---	---
17	MCLK	O	H/L
18	CPUCKN	I	H/L
19	C4M	I	H/L
20	C2MN	I	H/L
21	GND	---	---
22	GND	---	---
23	A12N	I	H/L
24	A11N	I	H/L
25	A10N	I	H/L
26	A9N	I	H/L
27	A6N	I	H/L
28	A5N	I	H/L
29	A4N	I	H/L
30	A3N	I	H/L

Pin	Signal Name	I/O	ACT (H/L)
31	A2N	I	H/L
32	A1N	I	H/L
33	D7N	B	H/L
34	D6N	B	H/L
35	D5N	B	H/L
36	D4N	B	H/L
37	D3N	B	H/L
38	D2N	B	H/L
39	D1N	B	H/L
40	D0N	B	H/L
41	HWR6	O	H/L
42	HWS6	I	H/L
43	HWR5	O	H/L
44	HWS5	I	H/L
45	HWR4	O	H/L
46	HWS4	I	H/L
47	TIP	---	---
48	RING	---	---
49	---	---	Not Used
50	GND	---	---
51	GND	---	---
52	CA0	I	H/L
53	CA1	I	H/L
54	OHCAR	---	---
55	+5V	---	---
56	OHCAT	---	---
57	-15V	---	---
58	GND	---	---
59	+15V	---	---
60	BELL	i	---

CN403/404

Pin	Signal Name	I/O	ACT (H/L)
1	ECK	I	H
2	IRWN	I	L
3	SRSTN	I	L
4	IOWN	I	L
5	IORN	I	L
6	IOCSN	I	L
7	CHS4	I	H/L
8	CHS3	I	H/L
9	CHS2	I	H/L
10	CHS1	I	H/L
11	CHS0	I	H/L
12	CPUCKN	I	H/L
13	C4M	I	H/L
14	C2MN	I	H/L
15	GND	---	---
16	GND	---	---
17	A12N	I	H/L
18	A11N	I	H/L
19	A10N	I	H/L
20	A9N	I	H/L
21	A6N	I	H/L
22	A5N	I	H/L
23	A4N	I	H/L
24	A3N	I	H/L
25	A2N	I	H/L

Pin	Signal Name	I/O	ACT (H/L)
26	A1N	I	H/L
27	D7N	B	H/L
28	D6N	B	H/L
29	D5N	B	H/L
30	D4N	B	H/L
31	D3N	B	H/L
32	D2N	B	H/L
33	D1N	B	H/L
34	D0N	B	H/L
35	HWR2/HWR3	O	H/L
36	HWS2/HWS3	I	H/L
37	RING	---	---
38	TIP	---	---
39	R2/R4	---	---
40	T2/T4	---	---
41	R1/R3	---	---
42	T1/T3	---	---
43	CA0	I	H/L
44	OHCAR	---	---
45	+5V	---	---
46	OHCAT	---	---
47	-15V	---	---
48	GND	---	---
49	+15V	---	---
50	BELL	---	---

PRINTED CIRCUIT BOARD (CPU BOARD)

6 7 8 9 10 11 12

(BOTTOM VIEW)

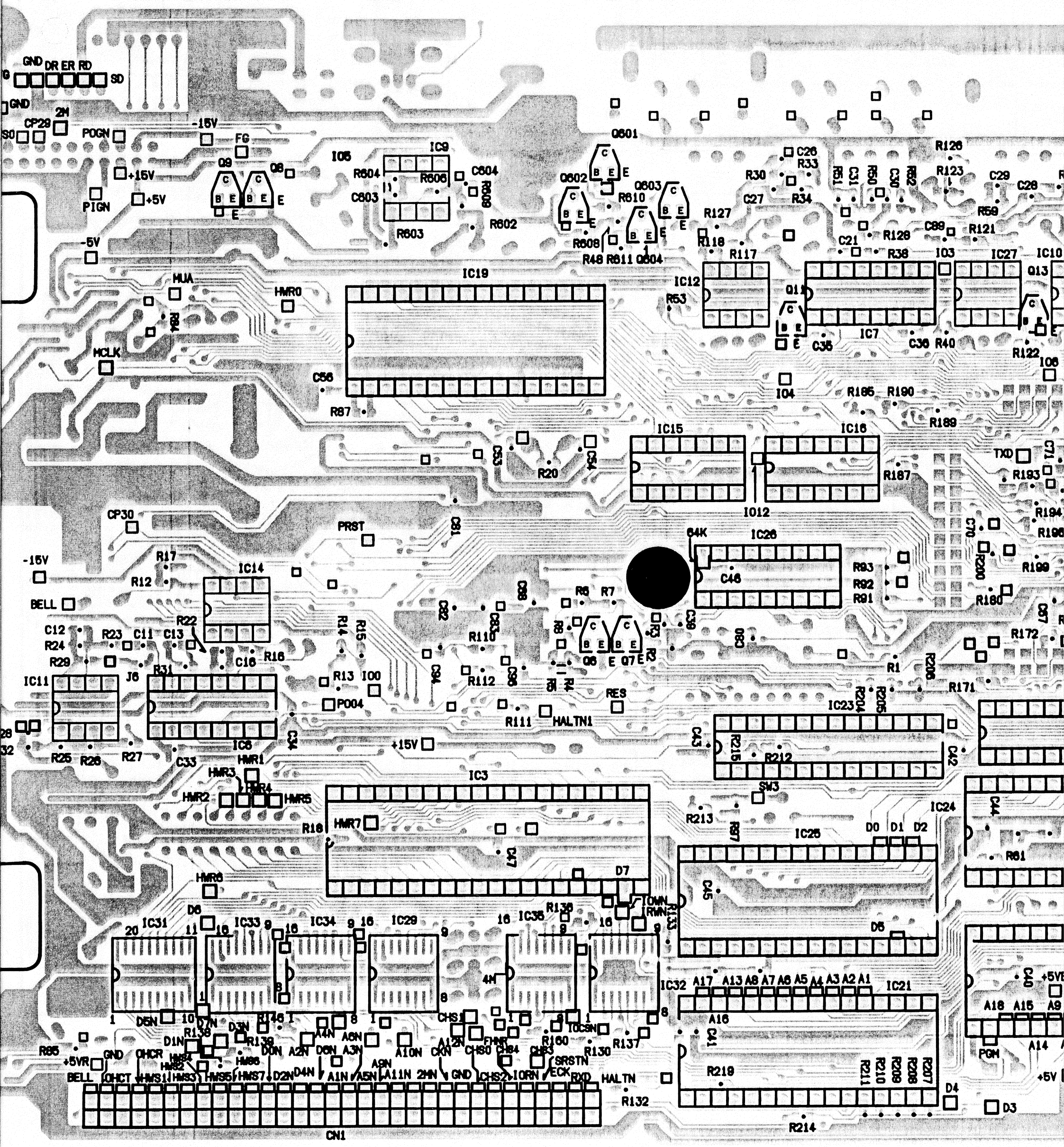

13 14 15 16 17 18 19

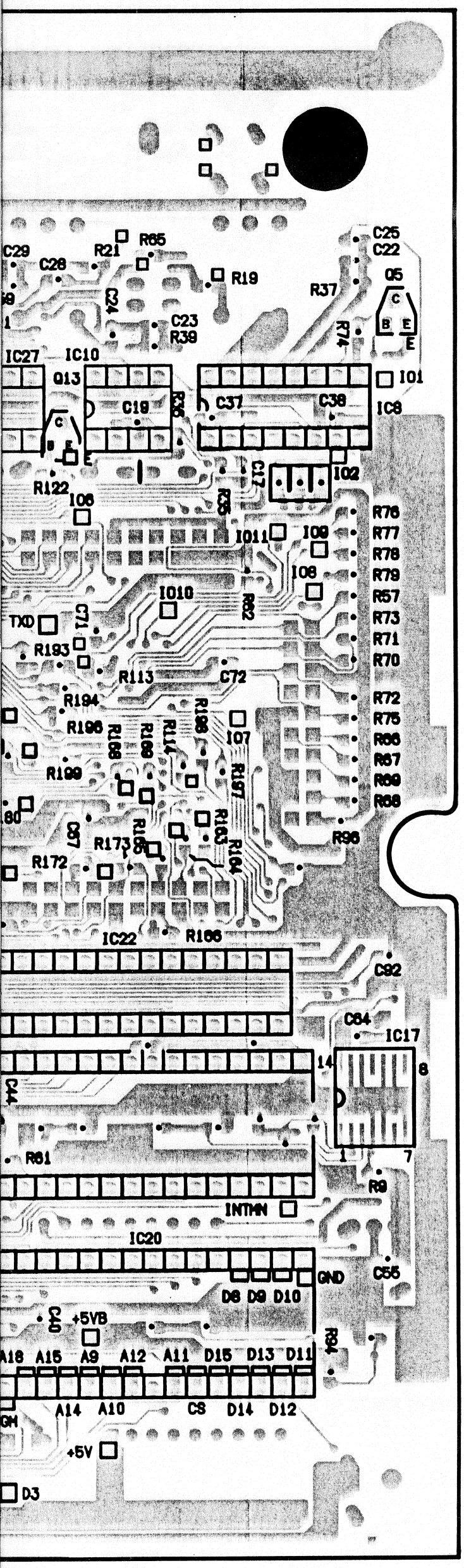

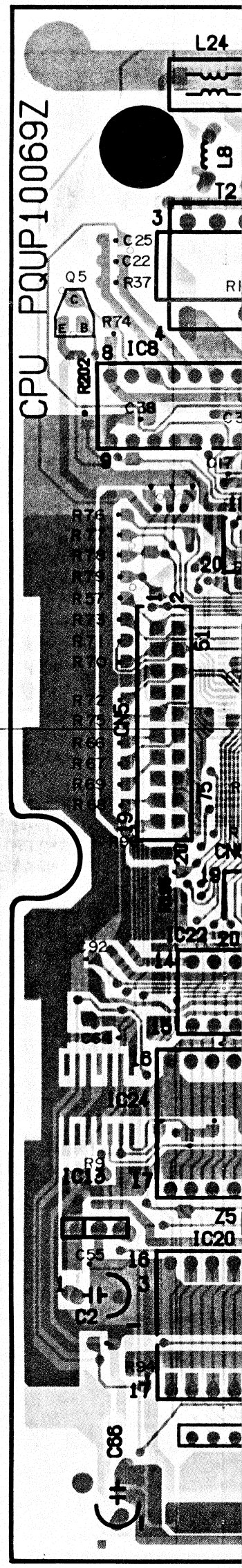

IC1

Pin No.	Voltage & Waveform
26–28	5
29	0
30–35	5
36	0
37–43	5
44	0
45, 46	5
47	0
48–50	5
51, 52	0
56, 57	5
58	5 / 0
59, 60	5 / 0
61	5
62	0
63, 64	5 / 0
65	5 / 0
68–71	5
72	5 / 0
73–75	5
77	5 / 0
78	5
79–81	5 / 0

Value is V.

Note: The following parts are not used on th
IC9
C601~C604
Q601~Q604
R601~R606
R608~R611

PRINTED CIRCUIT BOARD (CPU BOARD)

7 8 9 10 11 12 13

(COMPONENT VIEW)

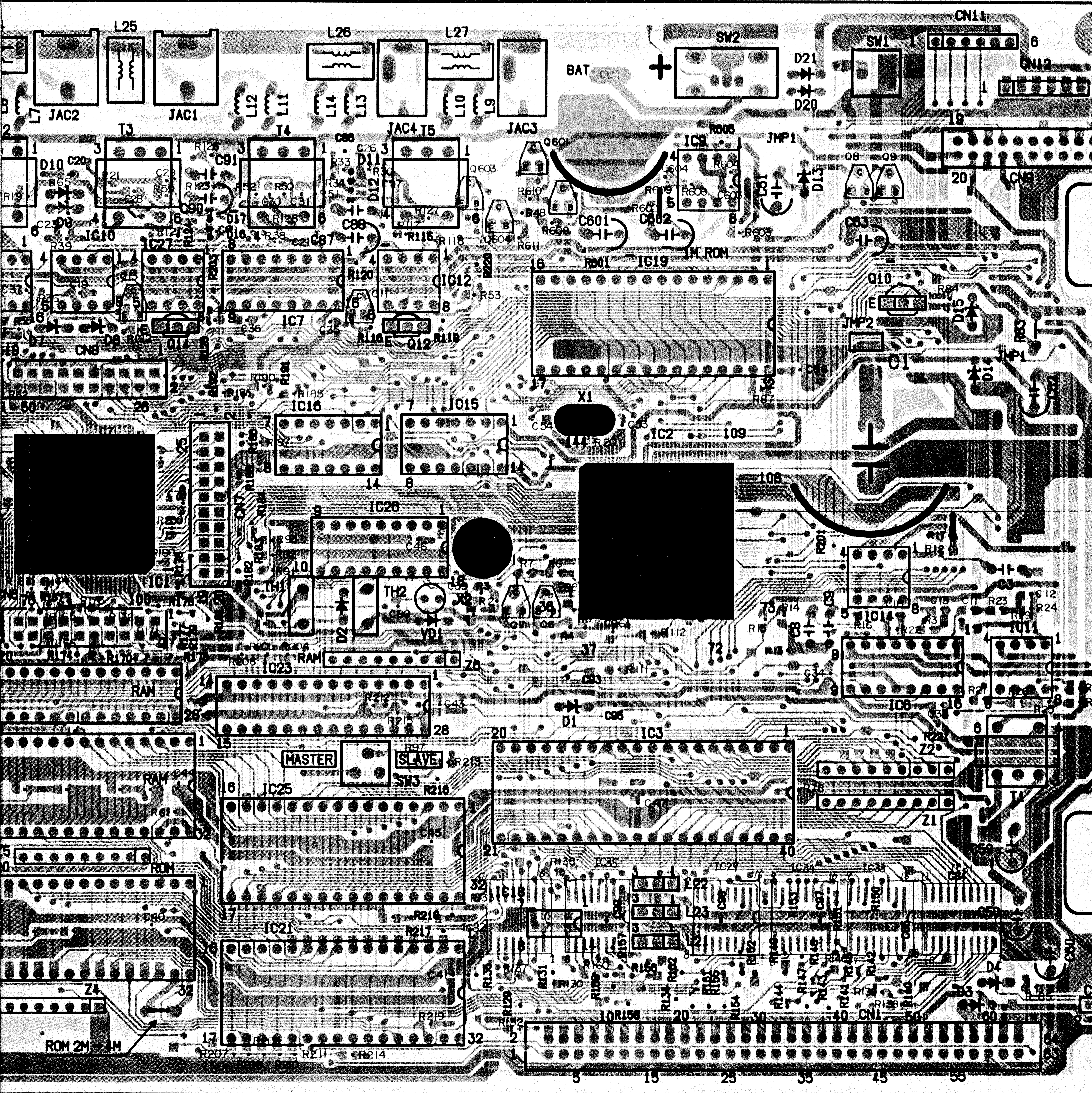

the P.C.B. for CANADA.

-TD1232C

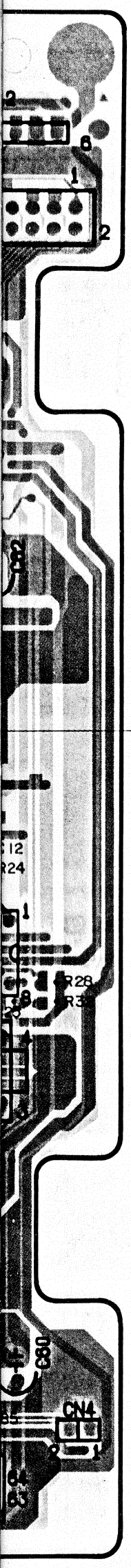

IC2

Pin No.	Voltage & Waveform
1	5
2	0
9	0
18	5
20, 21	0
30	0
41–44	5 / 0
45	0
46	5 / 0
47, 48	5 / 0
54	5
62–65	5 / 0
66	0
67–72	5 / 0
80, 81	0
90	5
102	0
103–110	5 / 0
116	5
117	0
118	5
126	0
128–130	5
137	5 / 0
138	0

Notes:

1. The circuit shown in ▭ on the conductor indicates printed circuit on the back side of the printed circuit board.
2. The circuit shown in ▭ on the conductor indicates printed circuit on the front side of the printed circuit board.
3. This printed circuit board may be modified at any time with the development of new technology.

SCHEMATIC DIAGR

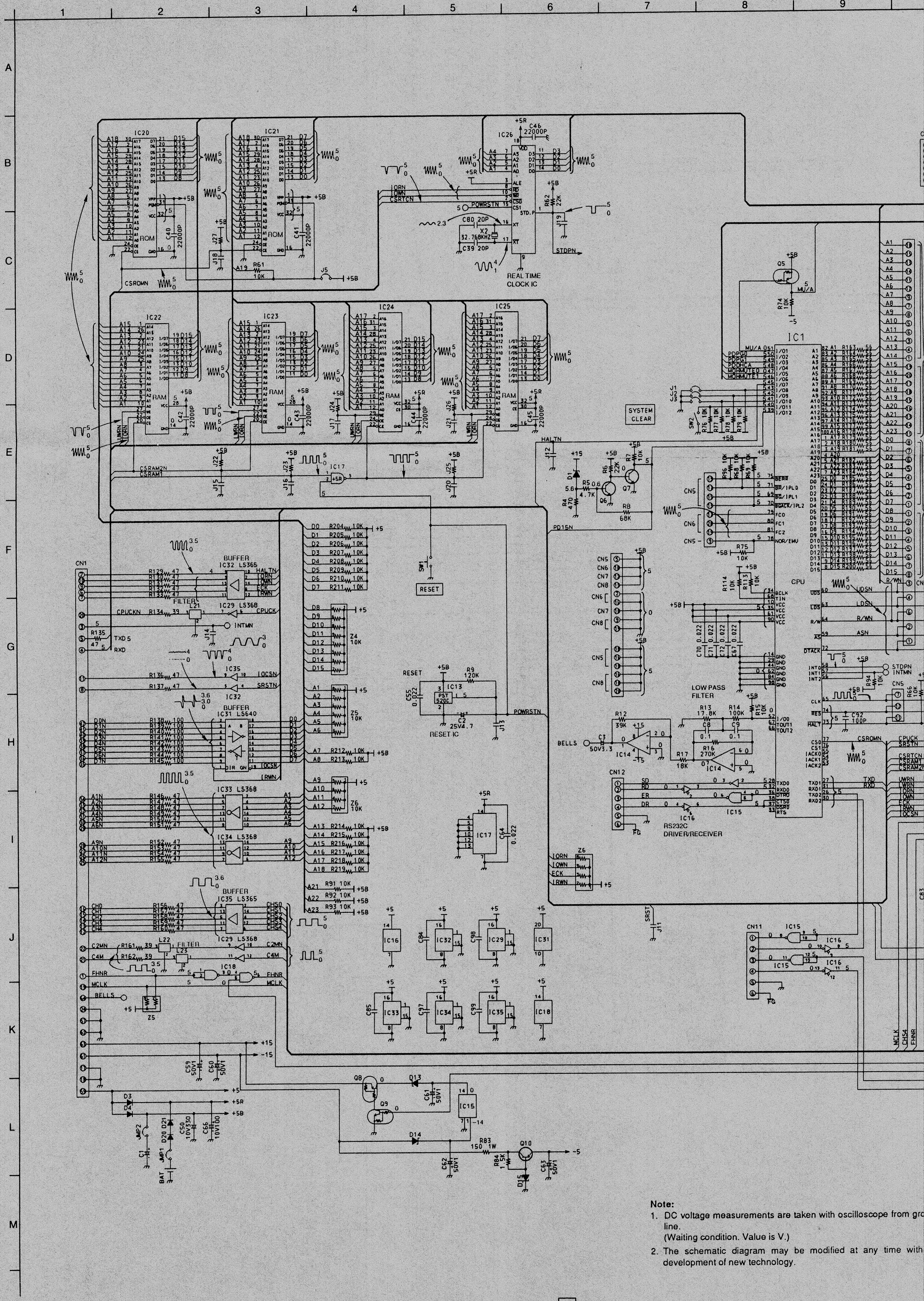

Note:

1. DC voltage measurements are taken with oscilloscope from gro line.
   (Waiting condition. Value is V.)
2. The schematic diagram may be modified at any time with development of new technology.

DIAGRAM (CPU CIRCUIT)

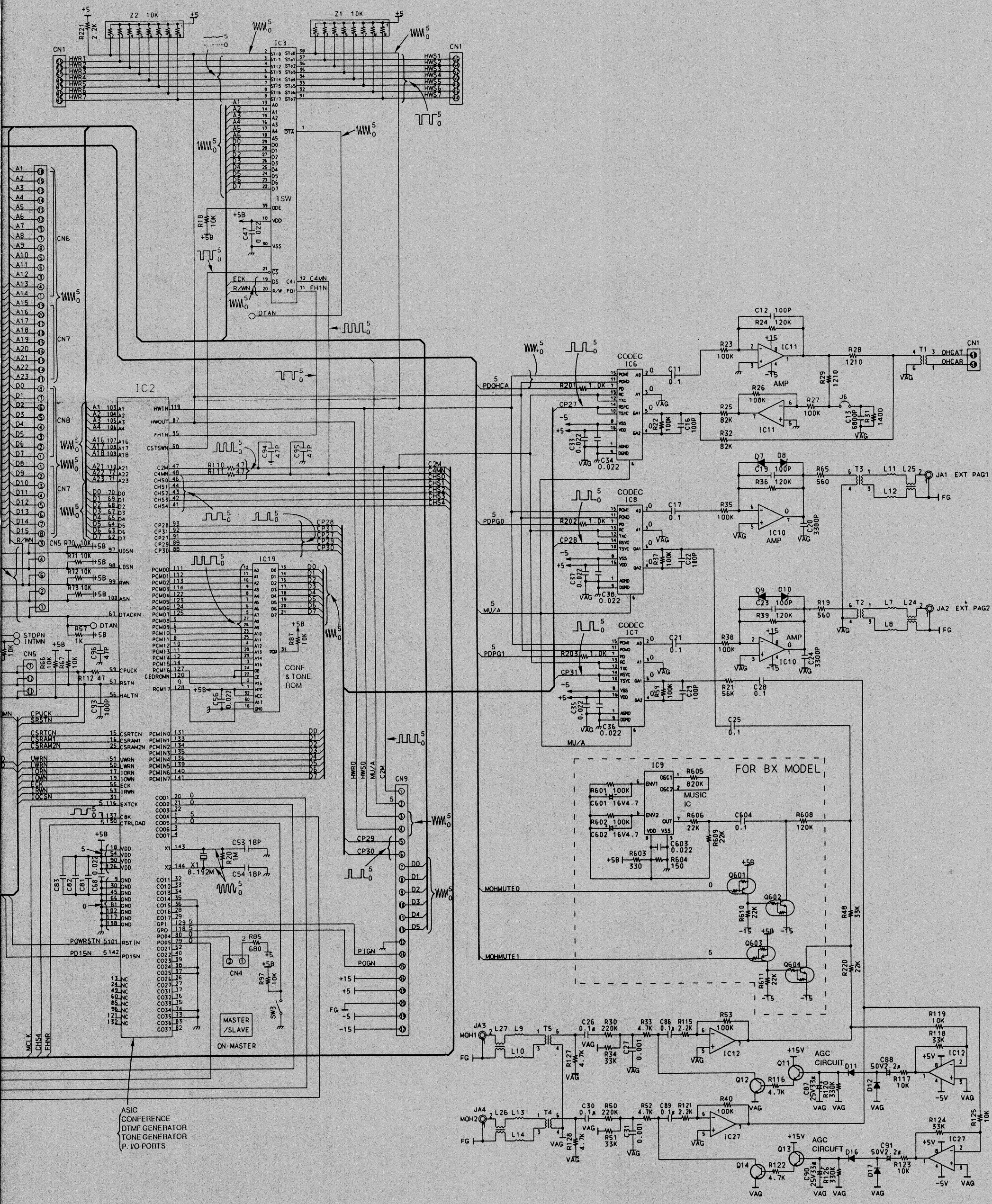

cope from ground

ny time with the

3. Important safety notice
Components identified by ⚠ mark have special characteristics important for safety. When replacing any of these components, use only manufacturer's specified parts.

4.

Varcap.	General	Zener	LED	Photo Diode
Anode / Cathode	Anode / Cathode	Anode / Cathode	Anode / Cathode	Cathode / Anode

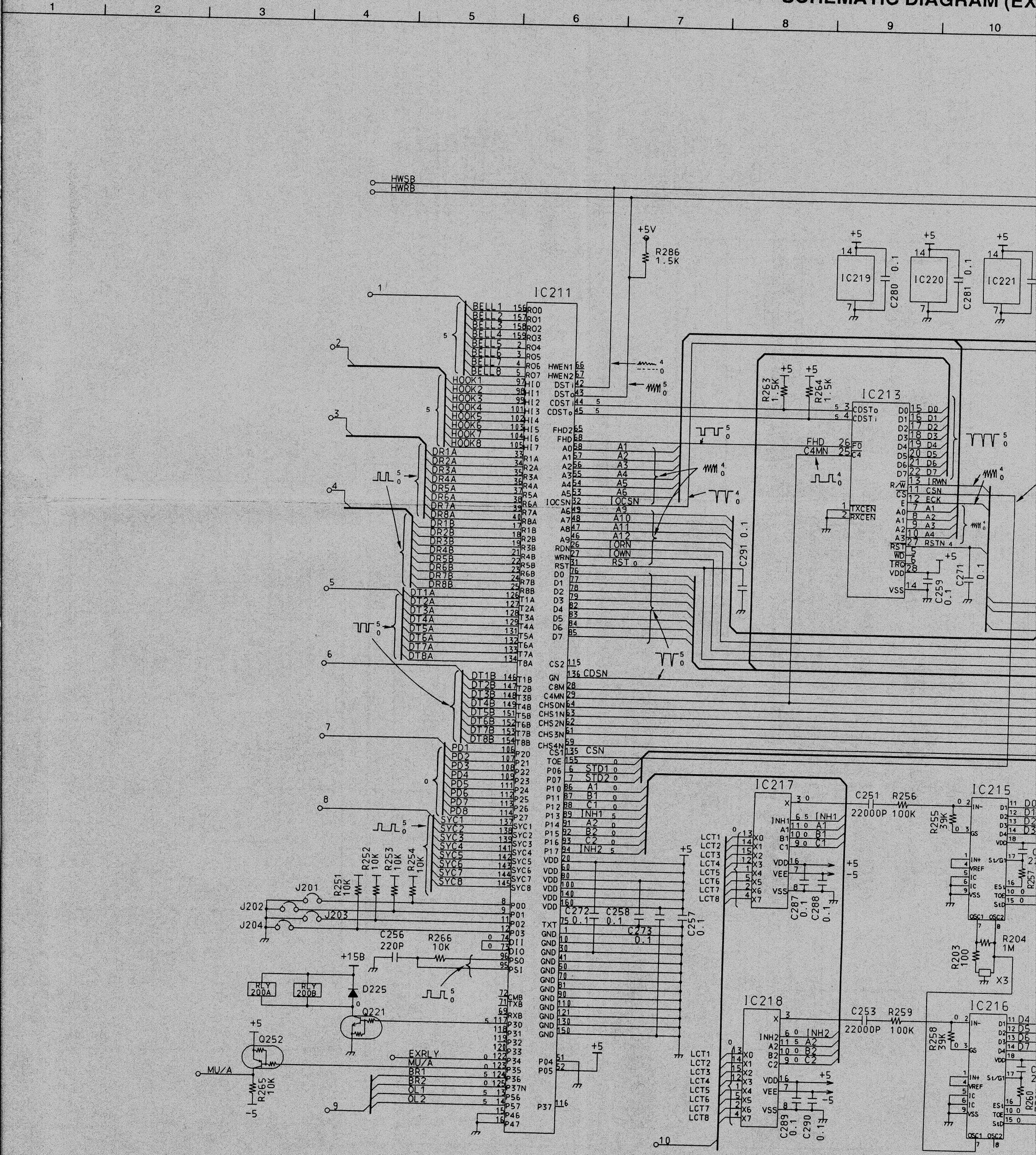
HWSB
HWRB
+5V
R286
1.5K
IC211
BELL1 BELL2 BELL3 BELL4 BELL5 BELL6 BELL7 BELL8
RO0 RO1 RO2 RO3 RO4 RO5 RO6 RO7
HWEN1 HWEN2
HOOK1 HOOK2 HOOK3 HOOK4 HOOK5 HOOK6 HOOK7 HOOK8
HI0 HI1 HI2 HI3 HI4 HI5 HI6 HI7
DSTi DSTo CDSTi CDSTo
FHD2 FHD
DR1A DR2A DR3A DR4A DR5A DR6A DR7A DR8A
R1A R2A R3A R4A R5A R6A R7A R8A
DR1B DR2B DR3B DR4B DR5B DR6B DR7B DR8B
R1B R2B R3B R4B R5B R6B R7B R8B
DT1A DT2A DT3A DT4A DT5A DT6A DT7A DT8A
T1A T2A T3A T4A T5A T6A T7A T8A
DT1B DT2B DT3B DT4B DT5B DT6B DT7B DT8B
T1B T2B T3B T4B T5B T6B T7B T8B
PD1 PD2 PD3 PD4 PD5 PD6 PD7 PD8
P20 P21 P22 P23 P24 P25 P26 P27
SYC1 SYC2 SYC3 SYC4 SYC5 SYC6 SYC7 SYC8
A0 A1 A2 A3 A4 A5 IOCSN A6 A7 A8 A9 RDN WRN RST D0 D1 D2 D3 D4 D5 D6 D7
A1 A2 A3 A4 A5 A6 A9 A10 A11 A12 IORN IOWN RST o
CS2 GN C8M C4MN CHSON CHS1N CHS2N CHS3N CHS4N CS1 TOE P06 P07 P10 P11 P12 P13 P14 P15 P16 P17 VDD VDD VDD VDD VDD VDD TXT GND GND GND GND GND GND GND GND GND GND
CDSN CSN STD1 STD2 A1 B1 C1 INH1 A2 B2 C2 INH2
P00 P01 P02 P03 DII DIO PSO PSI
CMB TXB RXB P30 P31 P32 P33 P34 P35 P36 P37N P56 P57 P46 P47
P04 P05 P37
EXRLY MU/A BR1 BR2 OL1 OL2
J201 J202 J203 J204
R251 10K R252 10K R253 10K R254 10K
C256 220P R266 10K
+15B
RLY 200A RLY 200B
D225
Q221
Q252
MU/A
R265 10K
-5
C272 0.1 C258 0.1 C273 0.1 C257 0.1
C291 0.1
IC219 IC220 IC221
C280 0.1 C281 0.1
R263 1.5K R264 1.5K
IC213
CDSTo CDSTi
D0 D1 D2 D3 D4 D5 D6 D7
IRWN CSN ECK A1 A2 A3 A4 RSTN
FHD C4MN
TXCEN RXCEN
C259 0.1 C271 0.1
IC217
LCT1 LCT2 LCT3 LCT4 LCT5 LCT6 LCT7 LCT8
X0 X1 X2 X3 X4 X5 X6 X7
INH1 A1 B1 C1
VDD VEE VSS
C287 0.1 C288 0.1
C251 22000P R256 100K
IC215
IN- IN+ VREF GS S1/G1 ES1 TOE StD OSC1 OSC2
R255 39K
R204 1M
R203 100
X3
IC218
INH2 A2 B2 C2
C289 0.1 C290 0.1
C253 22000P R259 100K
IC216
R258 39K
R260

DIAGRAM (EXT. ½ CIRCUIT)

10 11 12 13 14 15 16 17 18

IC220 IC221 IC222 IC223 IC224 C281 C282 C283 C284 C285 0.1

C295 R272 IC222 CN201

OHCAT 46
OHCAR 44
HWS 36
HWR 35

R270A 10K
R270B 10K
R270C 10K
R270D 10K
R270E 10K
R270F 10K
R270G 10K
R270H 10K

BELL 50
T1 42
R1 41
T2 40
R2 39
TIP 38
RING 37

IC221 A1N 26 A2N 25 A3N 24 A4N 23 A5N 22 A6N 21

IC219 IOCSN 6 A9N 20 A10N 19 A11N 18 A12N 17

R280 22K CA0 43

IC223 R271 6.8K IC222 IORN 5 IOWN 4 IRWN 2 ECK 1 SRSTN 3

RST RSTN D252 IC219

IC224 R299A 100 D0N 34
R299B 100 D1N 33
R299C 100 D2N 32
R299D 100 D3N 31
R299E 100 D4N 30
R299F 100 D5N 29
R299G 100 D6N 28
R299H 100 D7N 27

R267 100 C2MN 14
R268 100 C4M 13
R269 100 CPUCKN

CHS0 11
CHS1 10
CHS2 9
CHS3 8
CHS4 7

C2M C297 C298 C299 IC220

12
48
GND

D0 D1 D2 D3 D4 D5 D6 D7 IRWN CSN ECK A1 A2 A3 A4 RSTN

IC215 R255 39K C252 22000P R257 330K C295 0.1 C292 50V10 TOE STD1

C271 0.1 C259 0.1

R203 100 R204 1M X3 C296 0.1

IC216 R258 39K C254 22000P R260 330K TOE STD2

+15 F200 +15B R270 22 D223 C260 25V470µ C262 50V33µ CN201 +15 49 GND 15 GND 16

+5 45

F201 -15 47

-5V Q251 R261 1W82 R262 1.5K D251 C255 50V33µ C263 50V33µ C264 50V33µ

PRINTED CIRCUIT BO

4 5 6 7 8 9 10

(COMPONEN

IC213

Pin No.	Voltage & Waveform
3, 4	5
7–10	4 0
11	5 0
12, 13	4 0
15–22	5 0
25	4 0
27	4

Value is V.

IC201A

Pin No.	Voltage & Waveform
2–5	0
7	
10	0
11	4 0
12	4 0
15	4 0

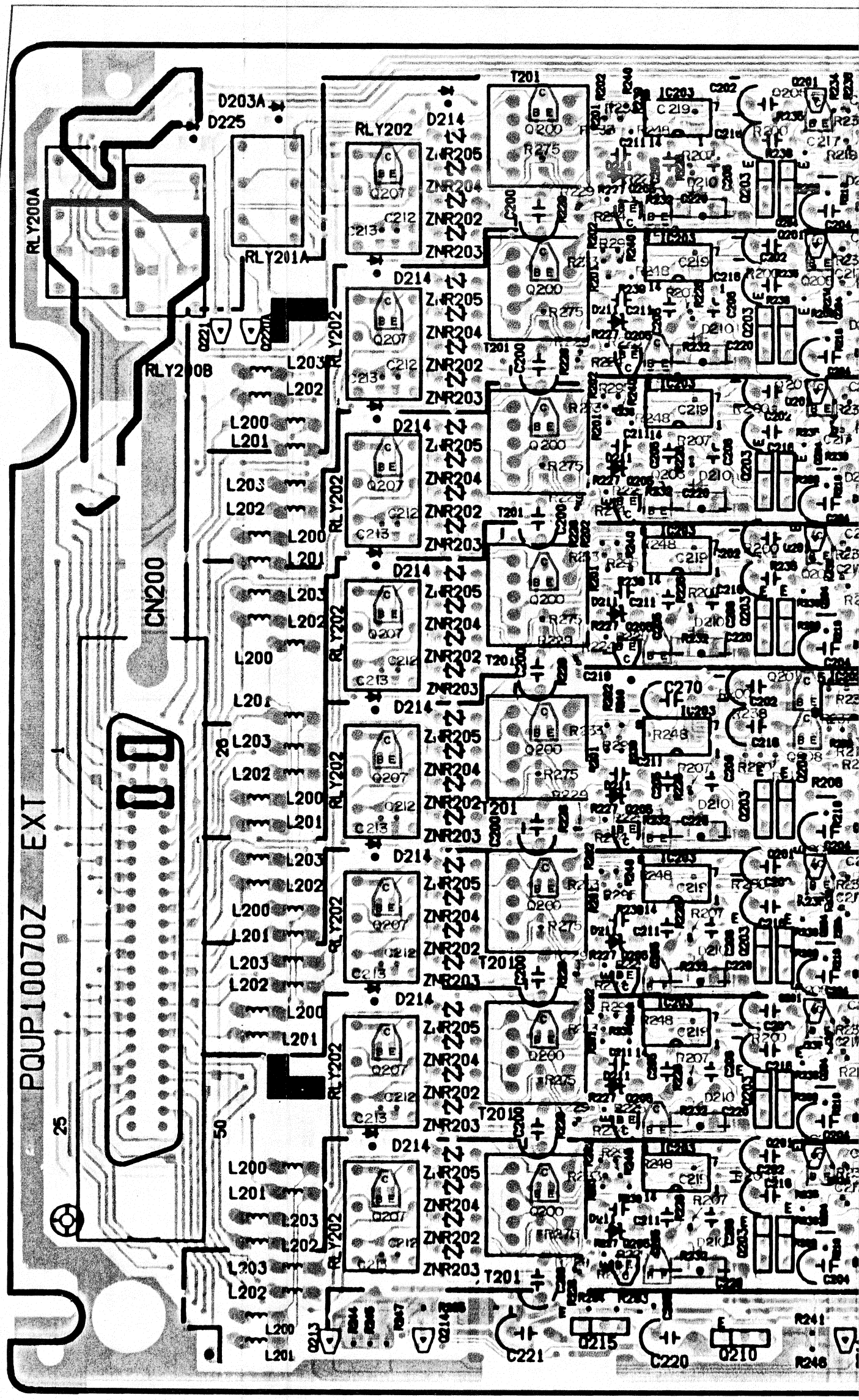

BOARD (EXT. BOARD)

10 | 11 | 12 | 13 | 14 | 15 | 16

)ONENT VIEW)

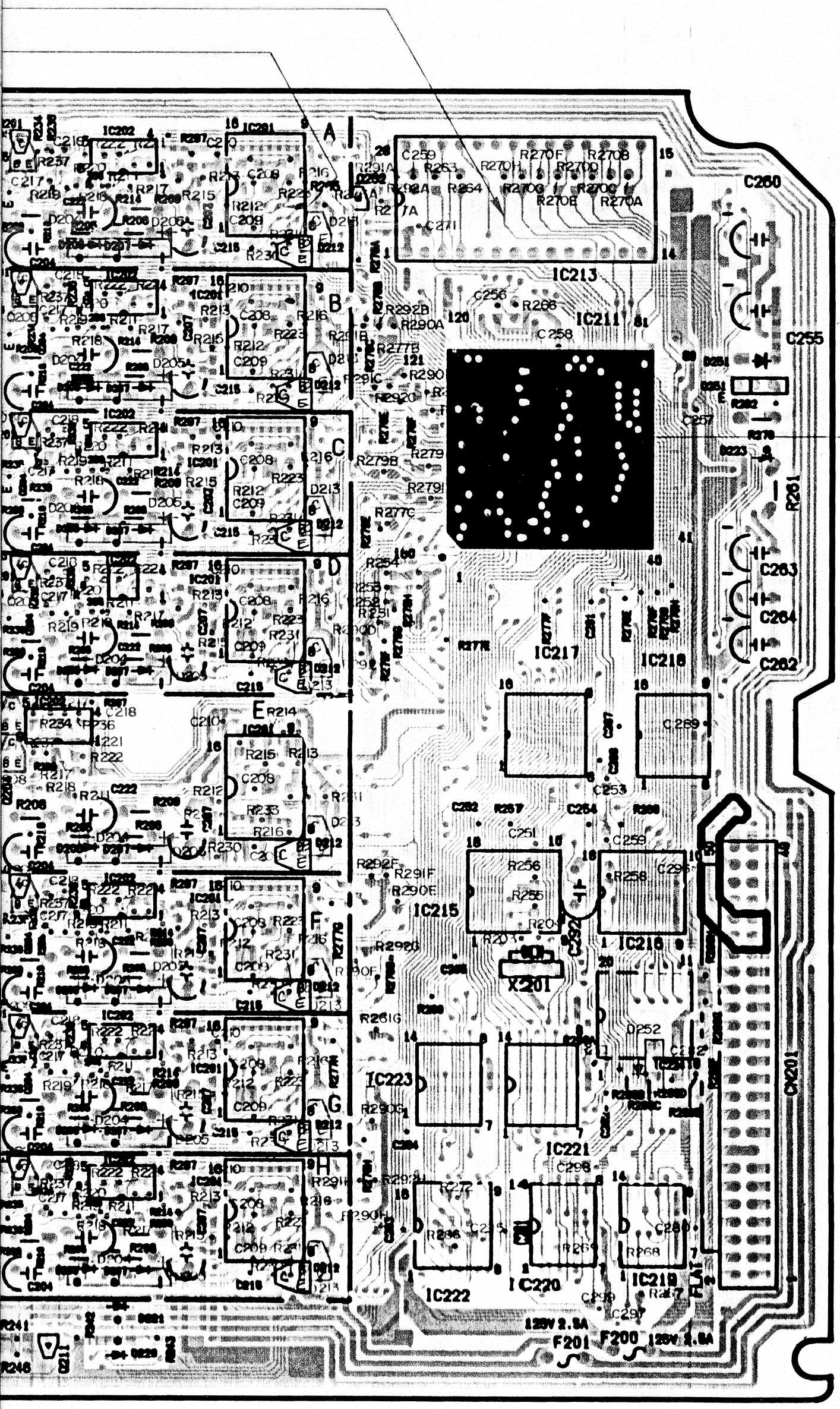

IC211

Pin No.	Voltage & Waveform
2–5	5
6, 7	0
13, 14	5
17–19	⊓⊓ 5 / 0
21–25	
26, 27	⊓⊓ 4 / 0
31	0
33–40	⊓⊓ 5 / 0
42	~~~ 4 / - - - 0
43	⊓⊓⊓⊓ 4 / 0
44, 45	5
46–49	⊓⊓ 4 / 0
53–58	⊓⊓⊓⊓ 4 / 0
68	⊓⊓ 5 / 0
73, 74	0
76–79	⊓⊓ 5 / 0
82–85	
86–88	0
89	5
91–93	0
94	5
95, 96	⊓_ 5 / 0
97–99	5
101–105	
106–109	0
111–114	
117	5
122, 123	0
124	5
125	0
126–129	⊓⊓ 5 / 0
131–134	
137–139	⊓⊓ 5 / 0
141–145	
146–149	⊓⊓ 5 / 0
151–154	
155	0
156–159	5

PRINTED CIRCUIT BOARD (EXT. BOARD)

6 7 8 9 10 11 12

(BOTTOM VIEW)

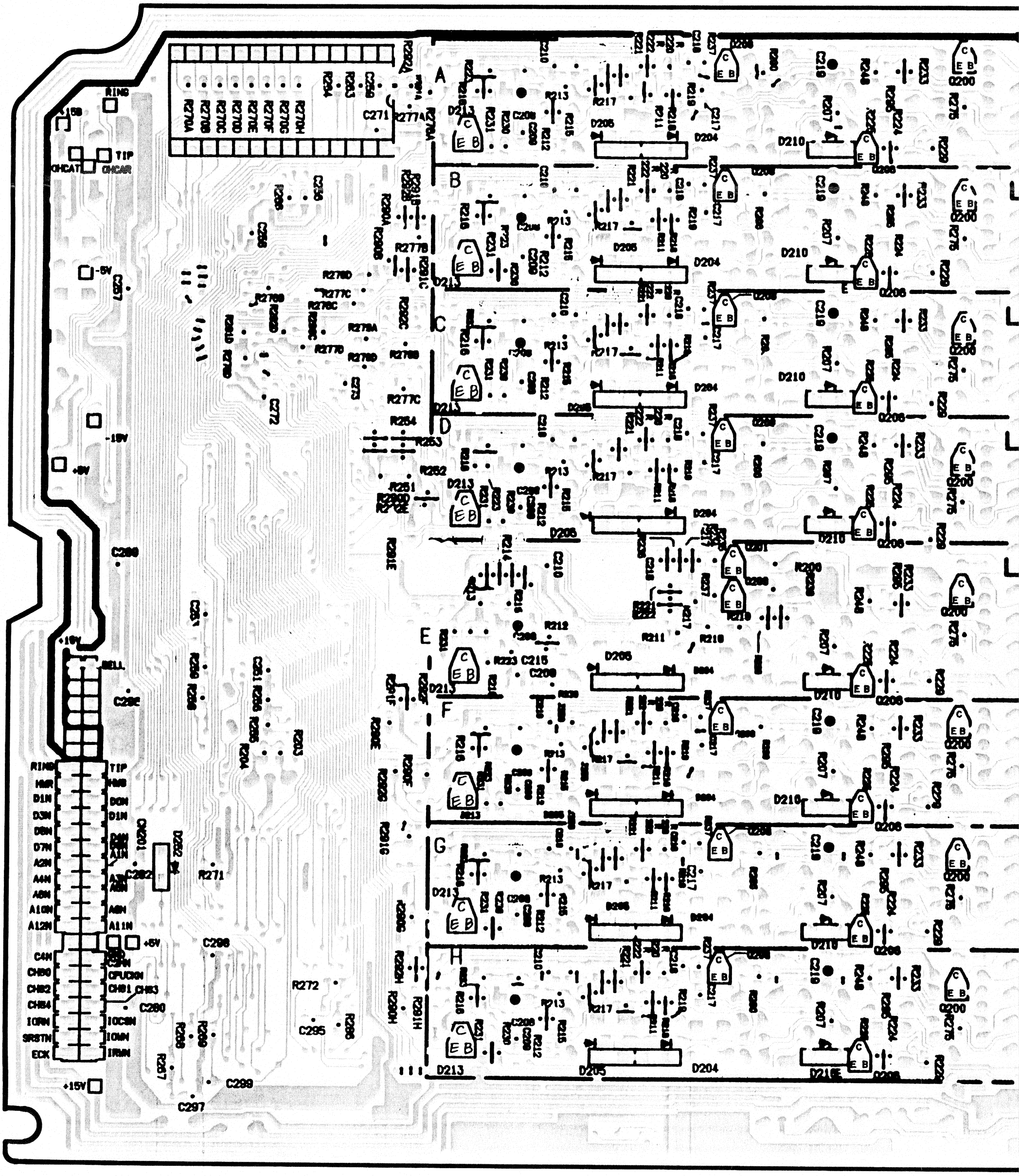

RD)

12 13 14 15 16 17 18

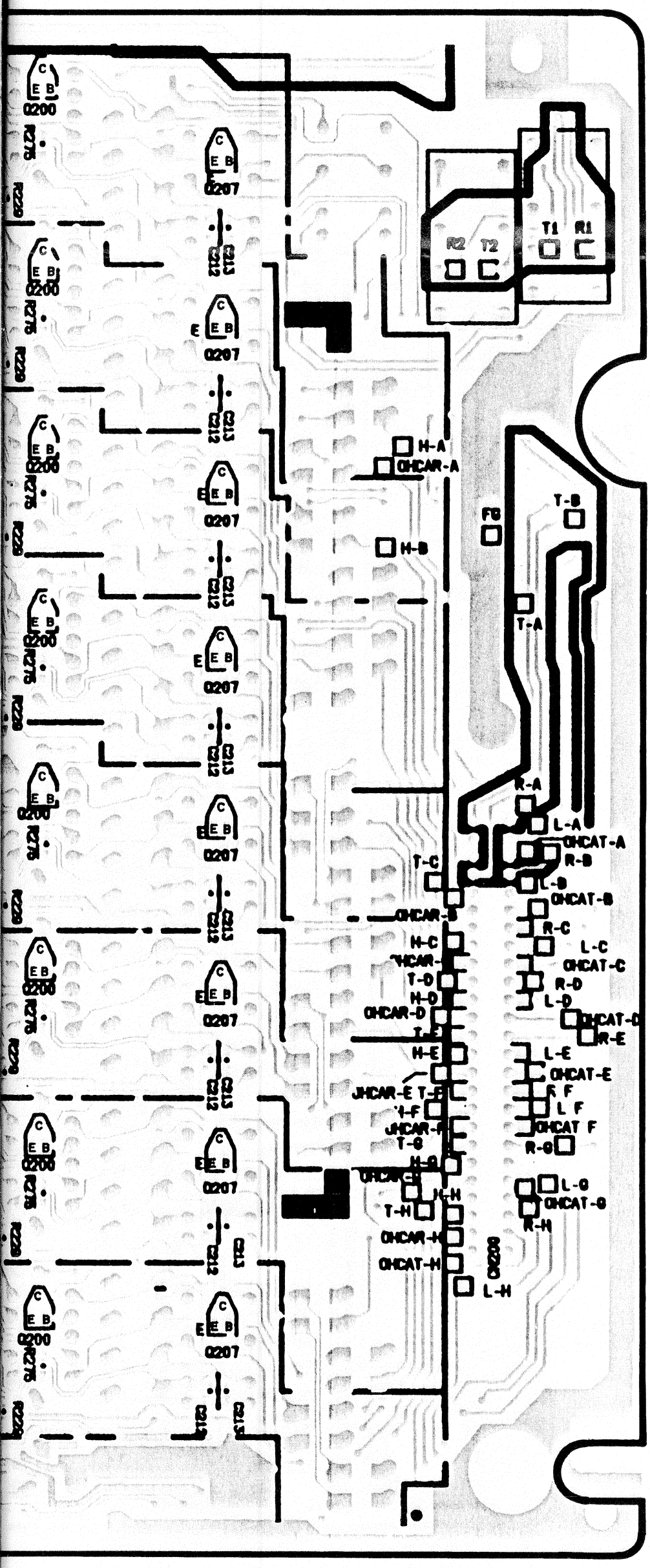

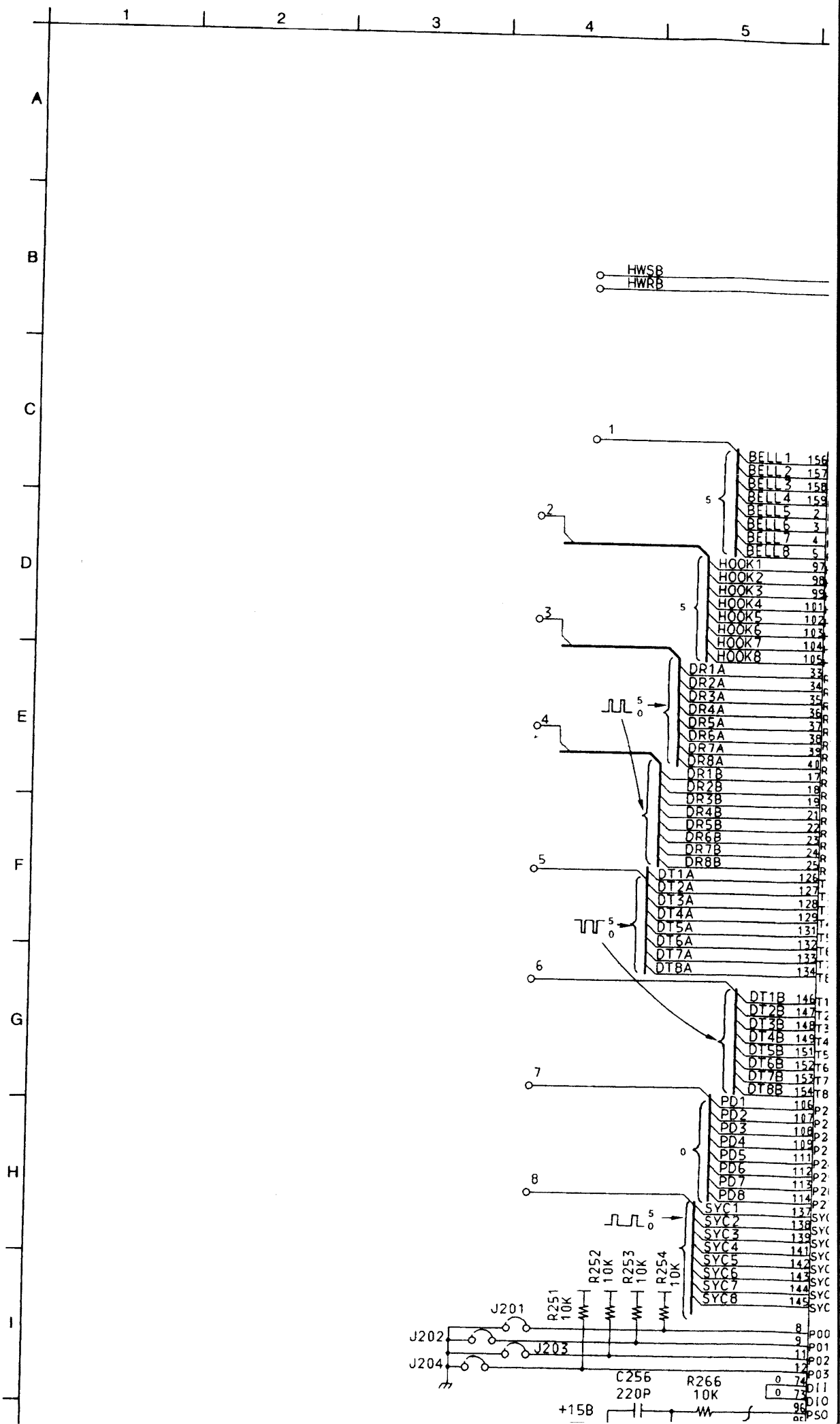
1
2
3
4
5
A
B
C
D
E
F
G
H
I
HWSB
HWRB
BELL1
BELL2
BELL3
BELL4
BELL5
BELL6
BELL7
BELL8
HOOK1
HOOK2
HOOK3
HOOK4
HOOK5
HOOK6
HOOK7
HOOK8
DR1A
DR2A
DR3A
DR4A
DR5A
DR6A
DR7A
DR8A
DR1B
DR2B
DR3B
DR4B
DR5B
DR6B
DR7B
DR8B
DT1A
DT2A
DT3A
DT4A
DT5A
DT6A
DT7A
DT8A
DT1B
DT2B
DT3B
DT4B
DT5B
DT6B
DT7B
DT8B
PD1
PD2
PD3
PD4
PD5
PD6
PD7
PD8
SYC1
SYC2
SYC3
SYC4
SYC5
SYC6
SYC7
SYC8
R251 10K
R252 10K
R253 10K
R254 10K
J201
J202
J203
J204
C256 220P
R266 10K
+15B

SCHEMATIC DIAGRAM (EXT. ½ CIRCUIT)

6 7 8 9 10 11 12 13 14 15 16 17 18

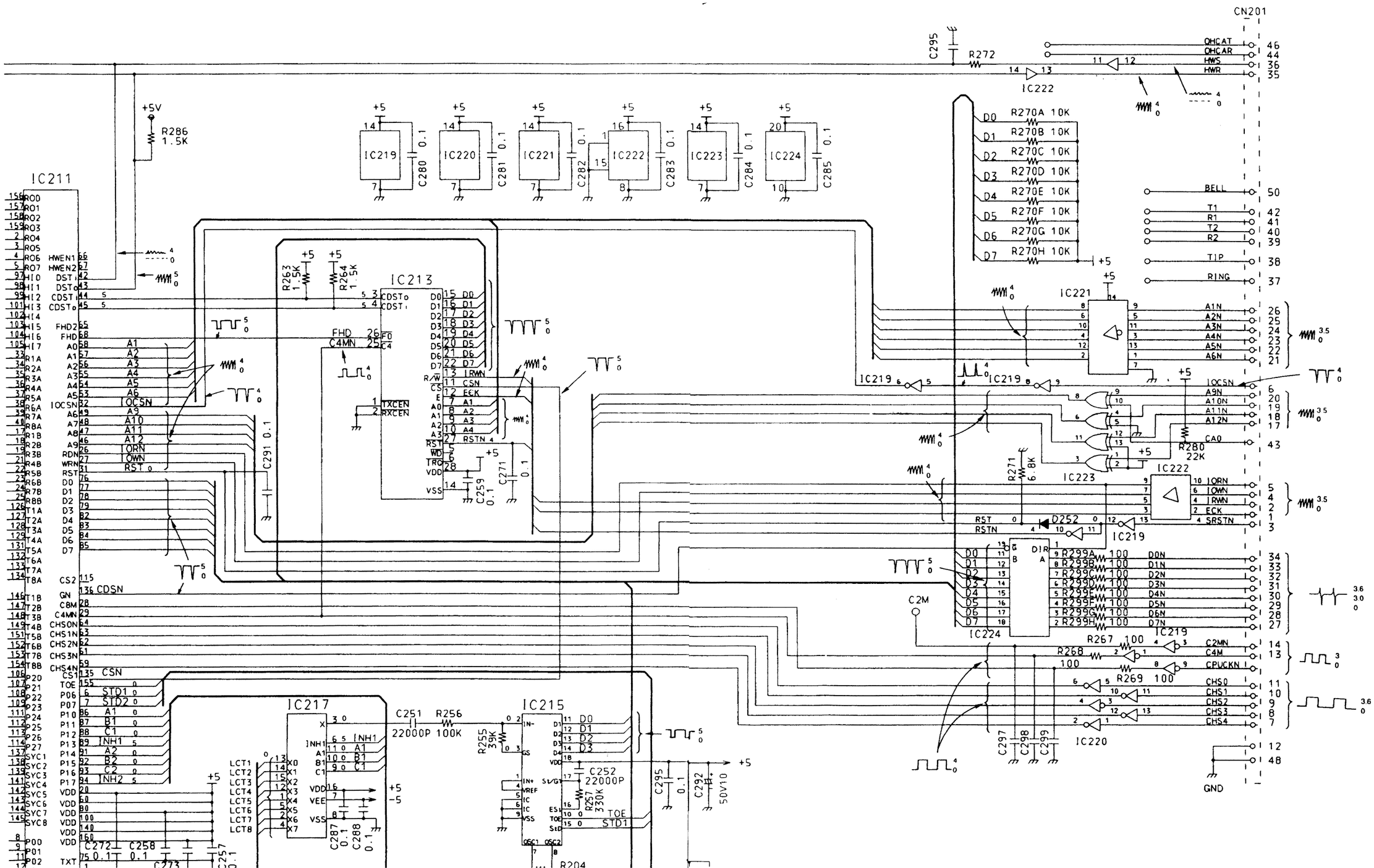

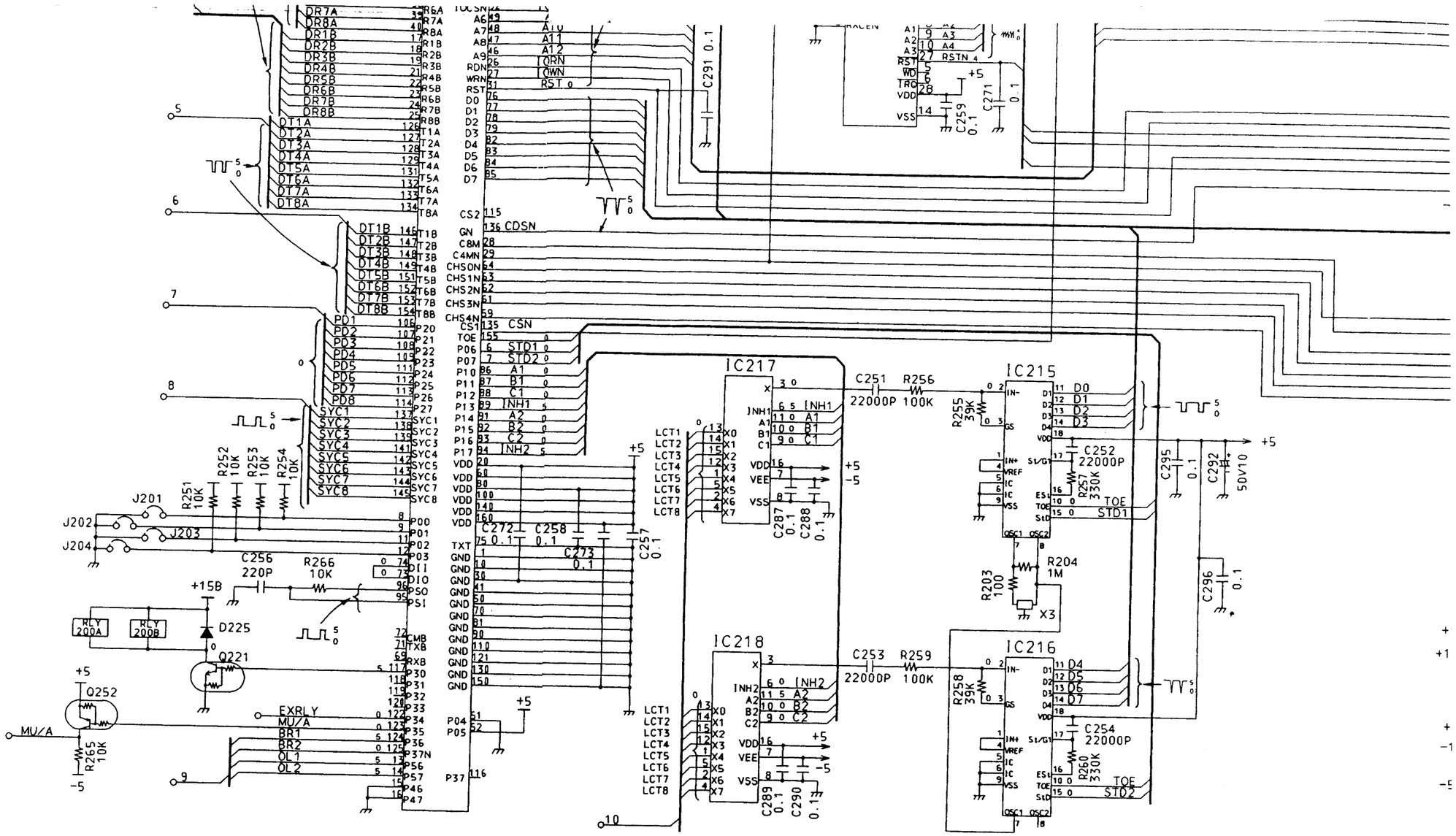
IC217
IC218
IC215
IC216
C251 R256 22000P 100K
C253 R259 22000P 100K
C252 22000P
C254 22000P
R255 39K
R258 39K
R257 330K
R260 330K
R204 1M
R203 100
X3
C271 0.1
C259 0.1
C291 0.1
C272 C258 C273 C257 0.1
C287 C288 C289 C290 0.1
C295 0.1
C292 50V10
C296 0.1
R251 10K
R252 10K
R253 10K
R254 10K
R266 10K
R265 10K
C256 220P
J201
J202
J203
J204
D225
Q221
Q252
RLY 200A
RLY 200B
+15B
+5
-5
MU/A
EXRLY
BR1
BR2
OL1
OL2
TOE
STD1
STD2

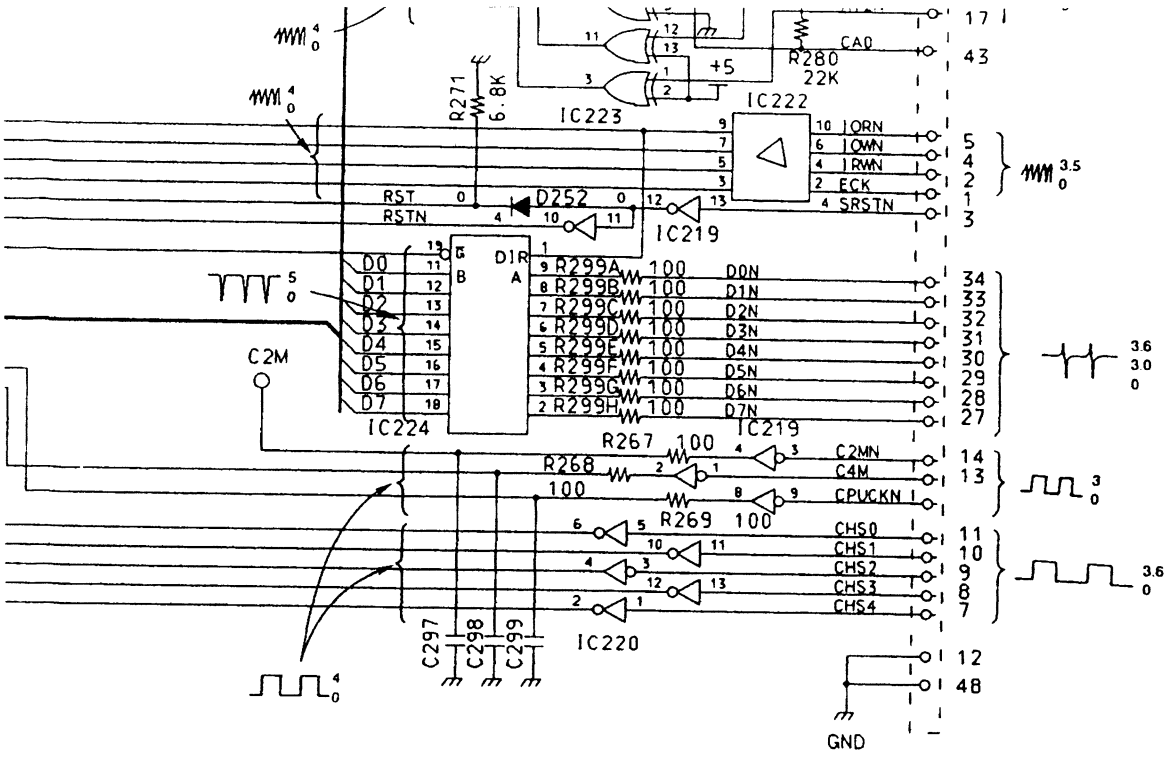
R271
6.8K
IC223
IC222
R280
22K
+5
CA0
ORN
OWN
RWN
ECK
SRSTN
RST
RSTN
D252
IC219
DIR
D0
D1
D2
D3
D4
D5
D6
D7
R299A 100 D0N
R299B 100 D1N
R299C 100 D2N
R299D 100 D3N
R299E 100 D4N
R299F 100 D5N
R299G 100 D6N
R299H 100 D7N
C2M
IC224
R267 100
R268 100
R269 100
C2MN
C4M
CPUCKN
CHS0
CHS1
CHS2
CHS3
CHS4
C297
C298
C299
IC220
GND

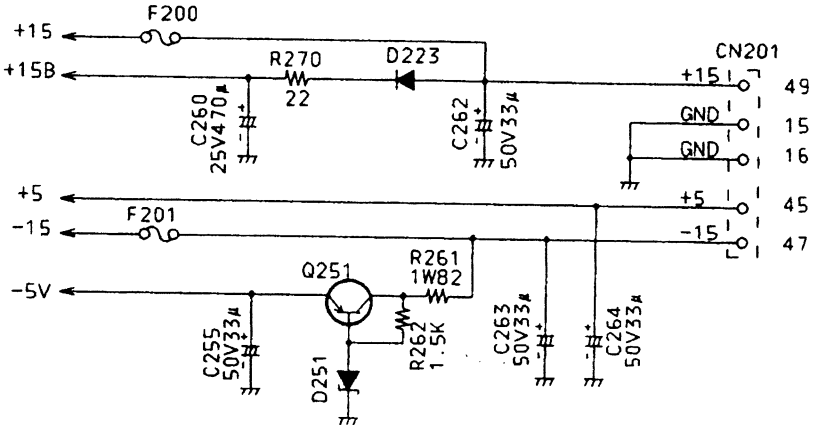
F200
+15
+15B
R270
22
D223
C260
25V470µ
C262
50V33µ
CN201
+15
GND
GND
+5
F201
-15
-5V
Q251
R261
1W82
R262
1.5K
D251
C255
50V33µ
C263
50V33µ
C264
50V33µ

SCHEMATIC DIAGRAM (CO CIRCUIT)

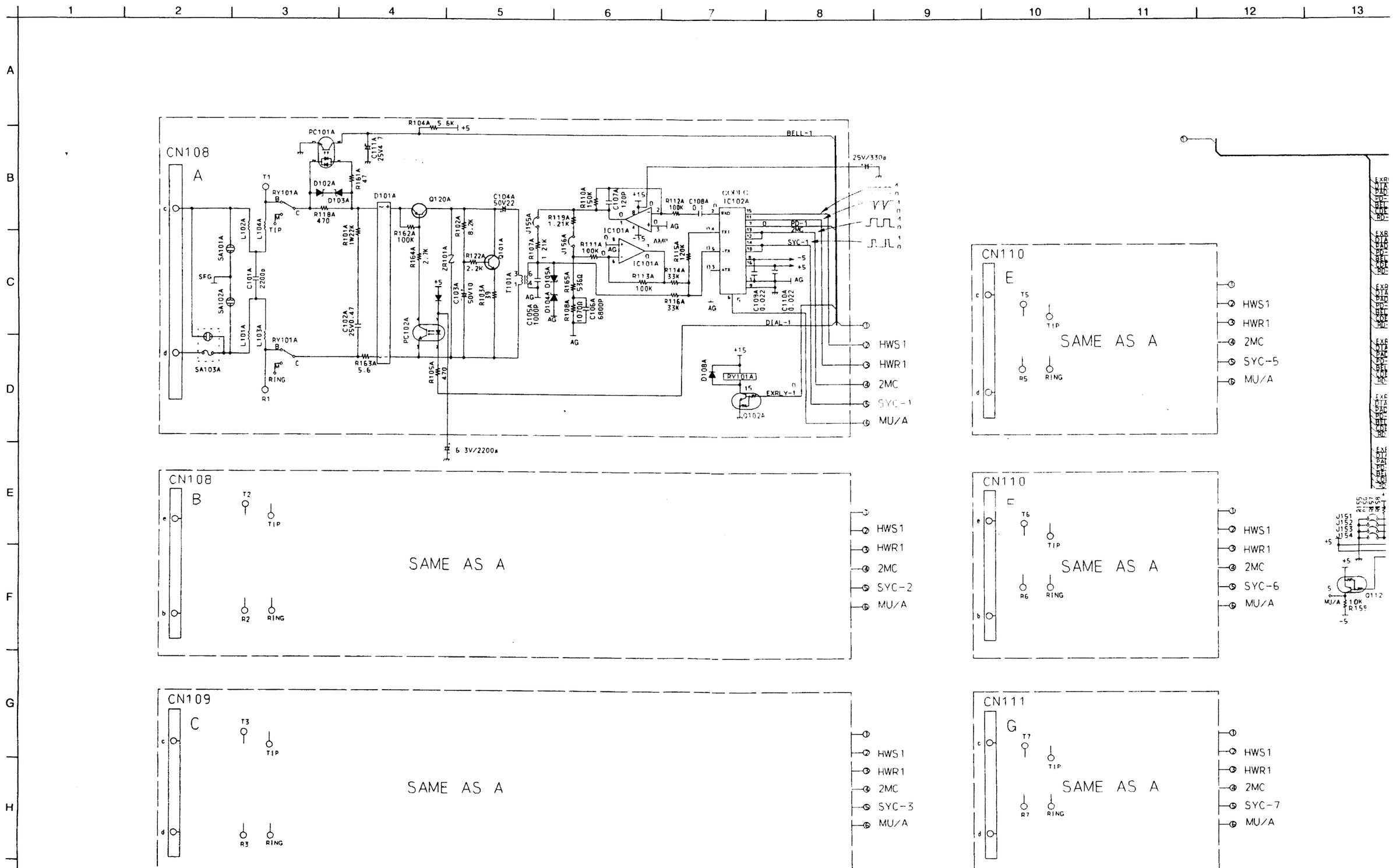

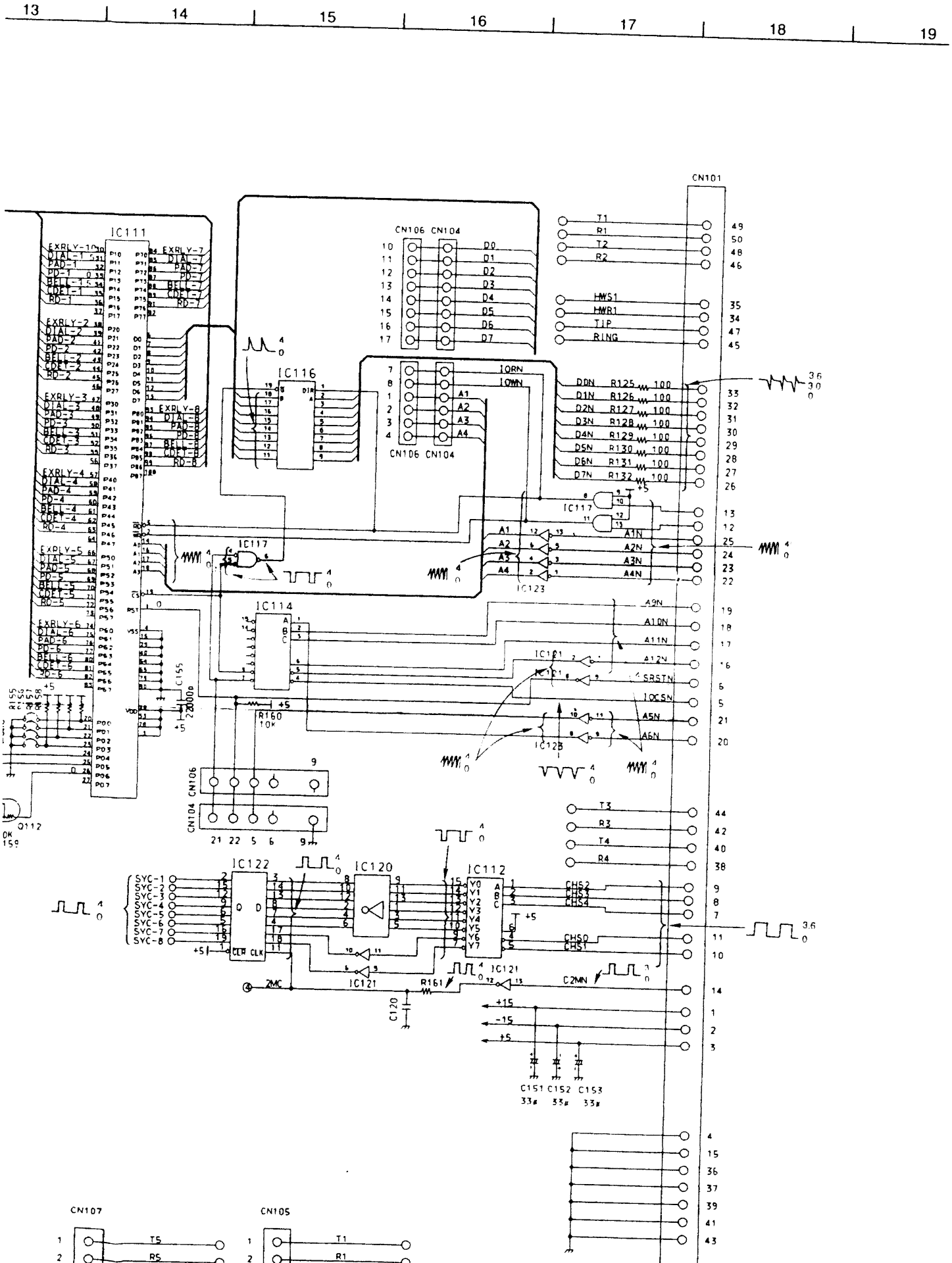
13
14
15
16
17
18
19
CN101
IC111
IC116
IC117
IC114
IC122
IC120
IC112
IC121
IC123
CN106 CN104
CN107
CN105
T1
R1
T2
R2
HWS1
HWR1
TIP
RING
D0N R125 100
D1N R126 100
D2N R127 100
D3N R128 100
D4N R129 100
D5N R130 100
D6N R131 100
D7N R132 100
A1N
A2N
A3N
A4N
A9N
A10N
A11N
A12N
SRSTN
IOCSN
A5N
A6N
T3
R3
T4
R4
CHS2
CHS3
CHS4
CHS0
CHS1
SYC-1
SYC-2
SYC-3
SYC-4
SYC-5
SYC-6
SYC-7
SYC-8
R160 10K
R161
C120
C155 22000p
C151 33μ
C152 33μ
C153 33μ
2MC
C2MN
Q112
T5
R5
T1
R1

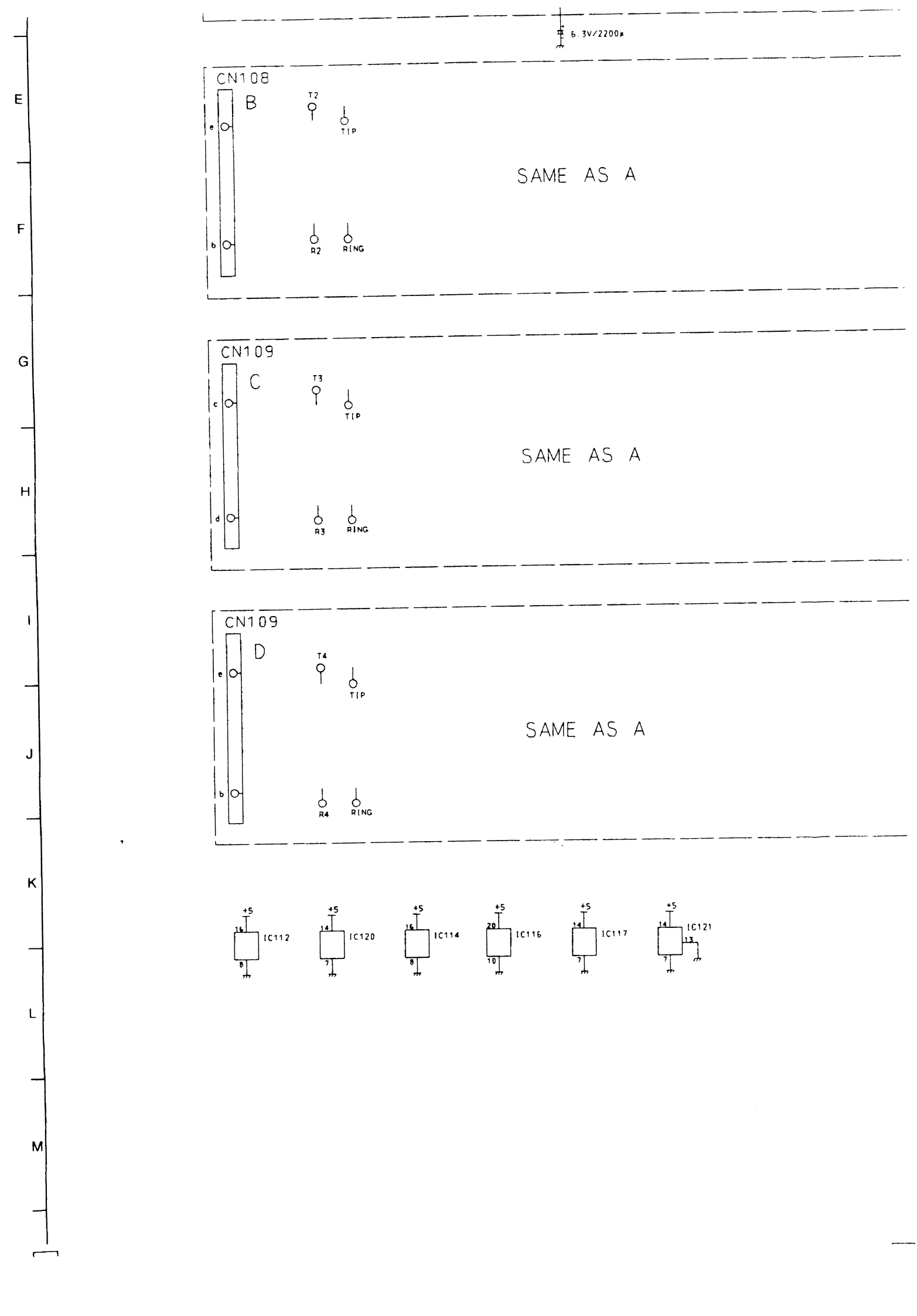
6.3V/2200μ
CN108
B
T2
TIP
e
b
R2
RING
SAME AS A
CN109
C
T3
TIP
c
d
R3
RING
SAME AS A
CN109
D
T4
TIP
e
b
R4
RING
SAME AS A
+5
IC112
IC120
IC114
IC116
IC117
IC121
E
F
G
H
I
J
K
L
M

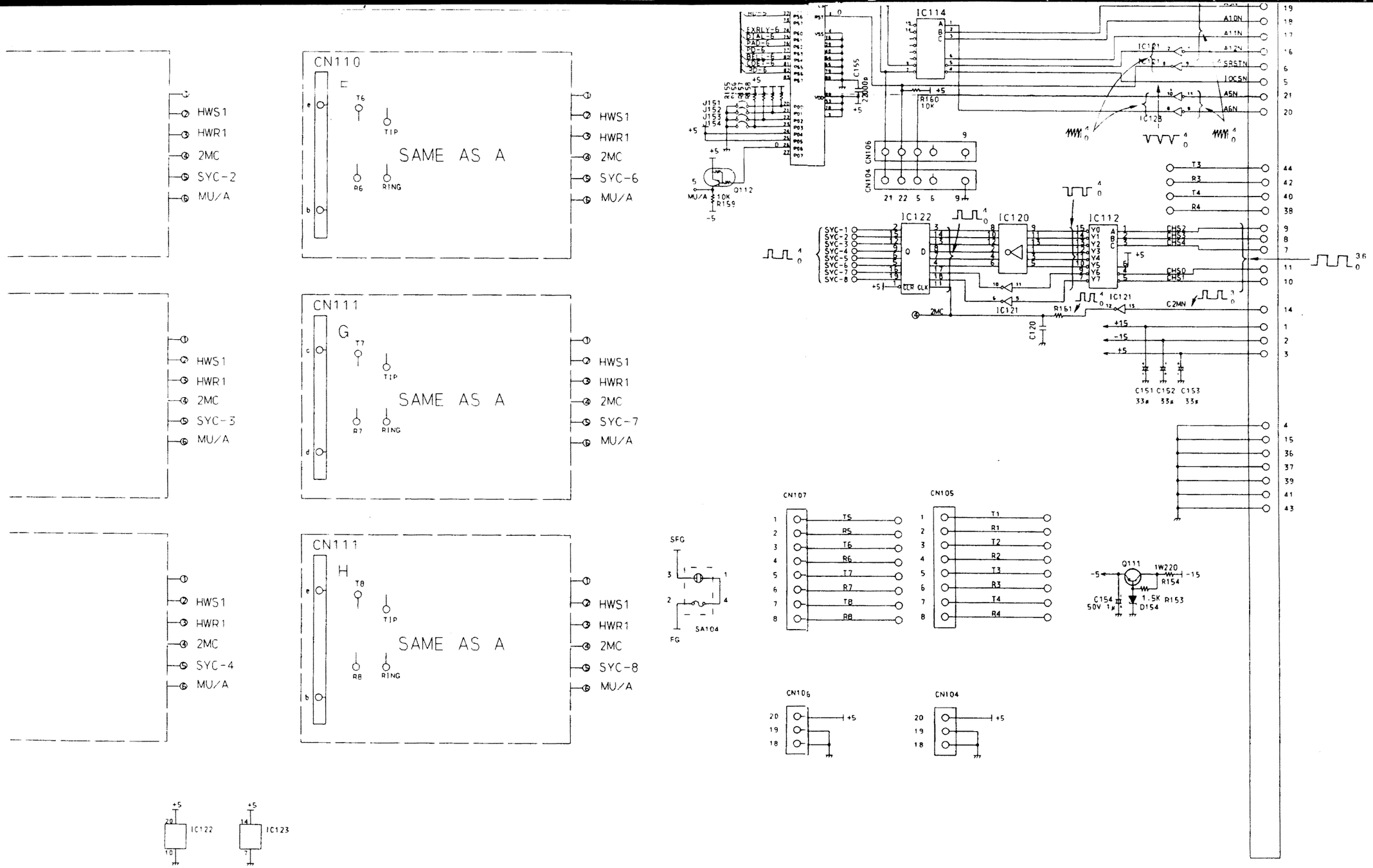
CN110
E
SAME AS A
HWS1
HWR1
2MC
SYC-2
MU/A
SYC-6
CN111
G
SYC-3
SYC-7
CN111
H
SYC-4
SYC-8
IC114
IC122
IC120
IC112
IC121
IC123
CN106
CN104
CN107
CN105
SFG
FG
SA104
Q111
Q112
1W220
R154
R153
D154
C154
50V 1μ
C151 C152 C153
33μ 33μ 33μ
C120
R161
R160
10K
R159
10K
J151
J152
J153
J154
C155
22000p
A10N
A11N
A12N
SRSTN
IOCSN
A5N
A6N
CHS2
CHS3
CHS4
CHS0
CHS1
C2MN
+15
-15
+5
-5

SCHEMATIC DIAGRAM (EXT. 2/2 CIRCUIT)

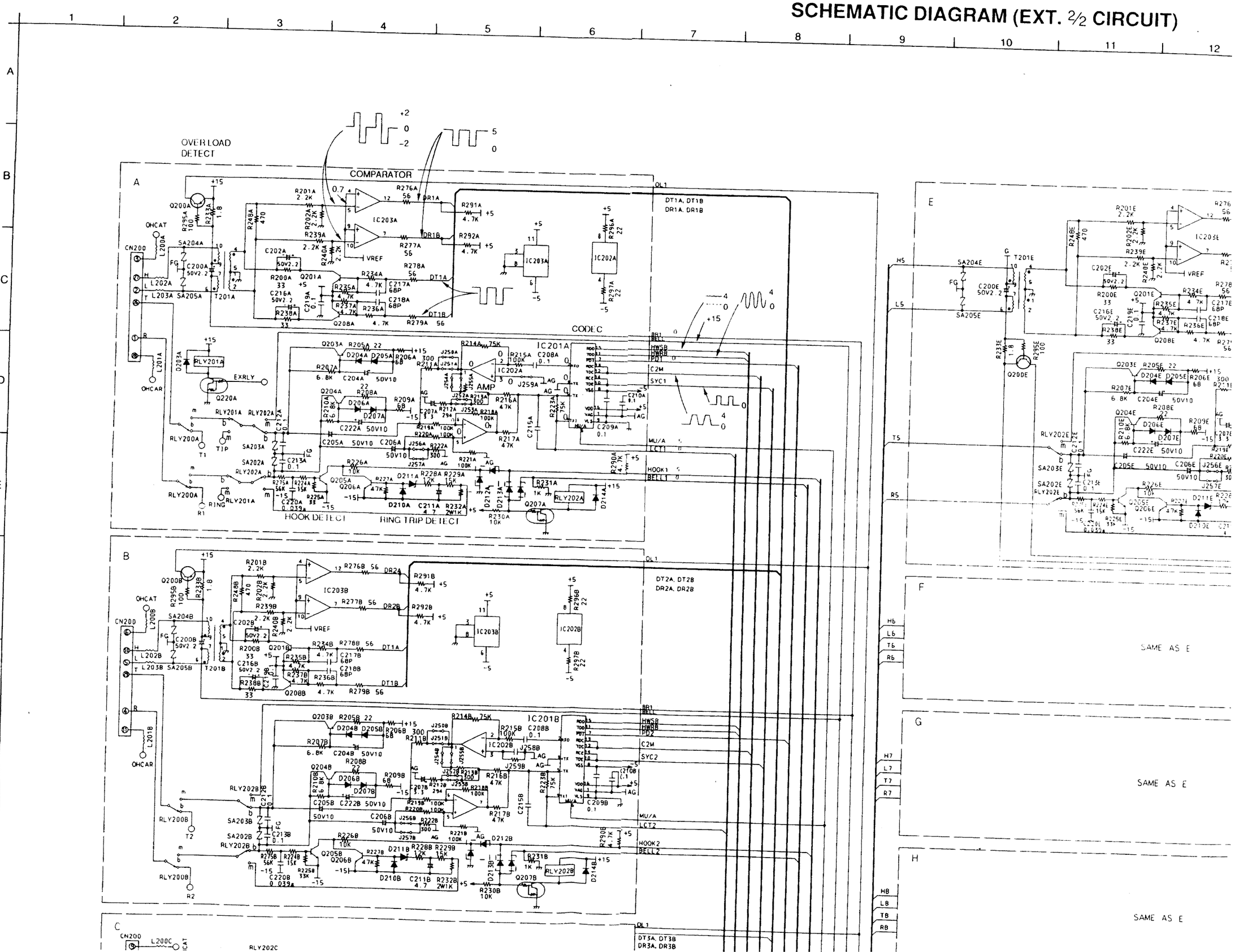

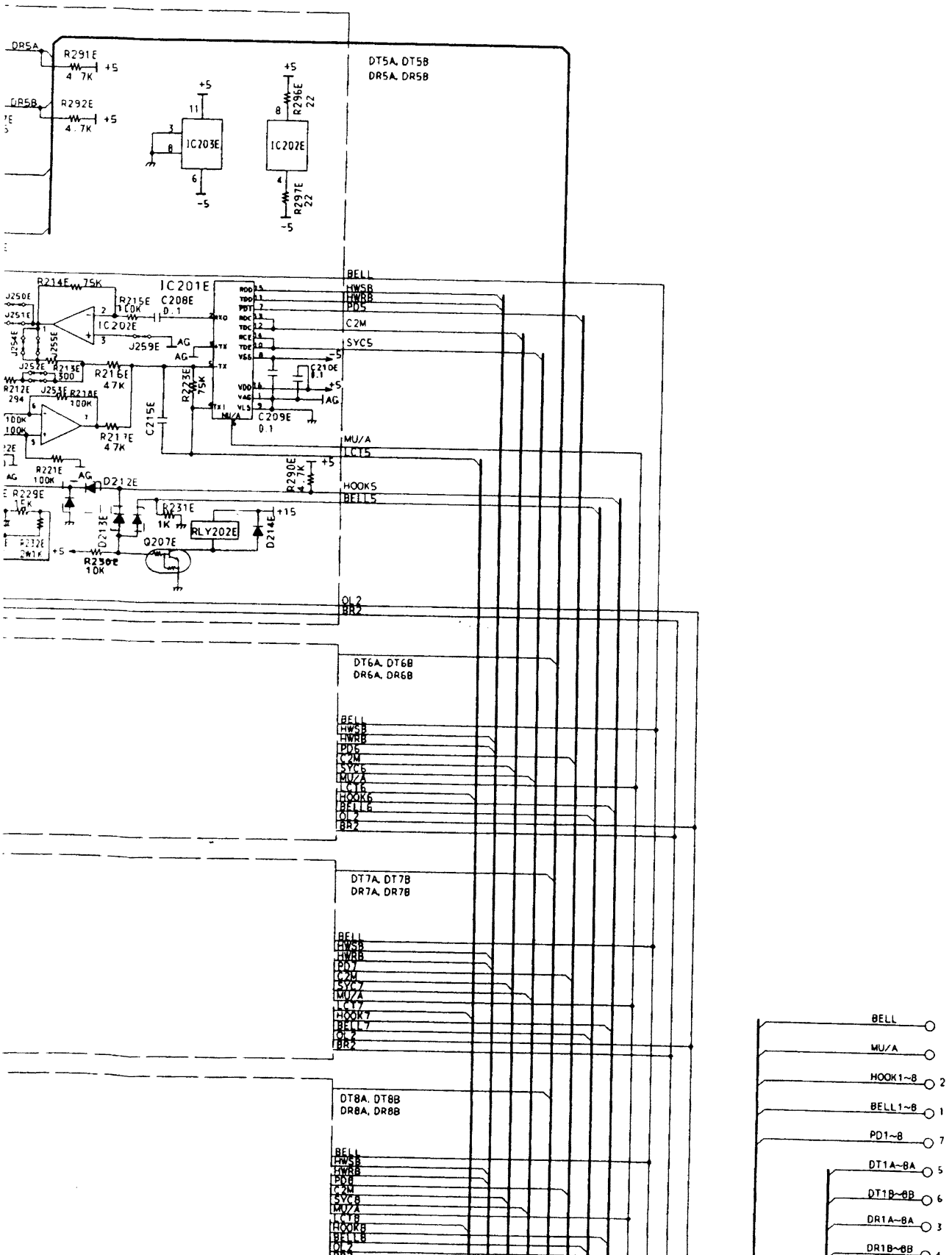
DR5A
R291E
4.7K
+5
DR5B
R292E
4.7K
+5
DT5A, DT5B
DR5A, DR5B
IC203E
IC202E
R296E
22
R297E
22
-5
IC201E
R214E 75K
R215E 100K
C208E 0.1
IC202E
J259E
AG
R216E 47K
R217E 47K
C215E
R223E 75K
C210E 0.1
C209E 0.1
R221E 100K
D212E
R229E 15K
R231E 1K
RLY202E
D213E
D214E
Q207E
R230E 10K
+15
R290E 4.7K
BELL
HWSB
HWRB
PD5
C2M
SYC5
MU/A
LC15
HOOK5
BELL5
OL2
BR2
DT6A, DT6B
DR6A, DR6B
BELL
HWSB
HWRB
PD6
C2M
SYC6
MU/A
LC16
HOOK6
BELL6
OL2
BR2
DT7A, DT7B
DR7A, DR7B
BELL
HWSB
HWRB
PD7
C2M
SYC7
MU/A
LC17
HOOK7
BELL7
OL2
BR2
DT8A, DT8B
DR8A, DR8B
BELL
HWSB
HWRB
PD8
C2M
SYC8
MU/A
LC18
HOOK8
BELL8
OL2
BR2
BELL
MU/A
HOOK1~8
BELL1~8
PD1~8
DT1A~8A
DT1B~8B
DR1A~8A
DR1B~8B
2
1
7
5
6
3
4

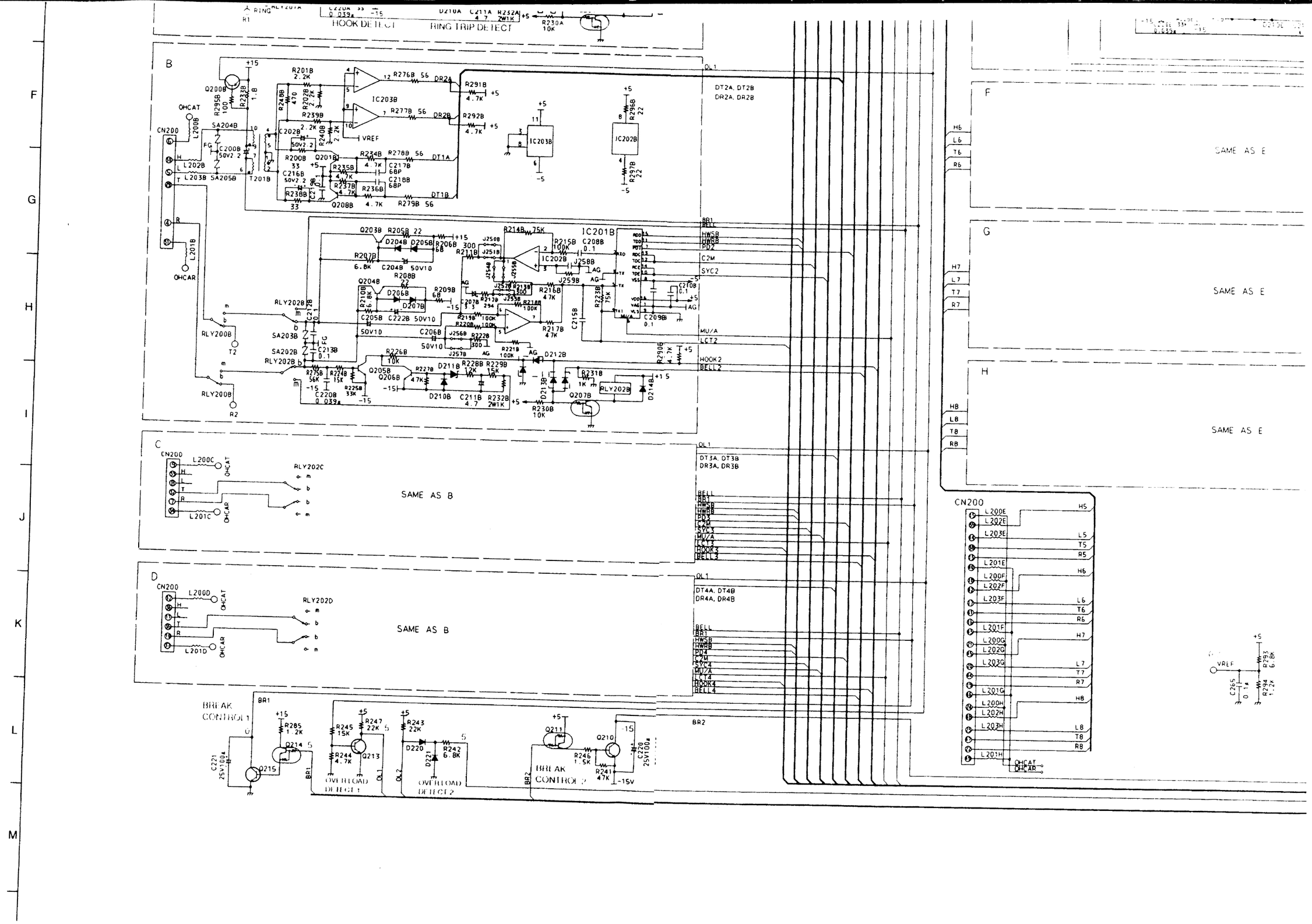
HOOK DETECT
RING TRIP DETECT
B
C
D
F
G
H
SAME AS B
SAME AS B
SAME AS E
SAME AS E
SAME AS E
IC201B
IC203B
IC202B
CN200
BREAK CONTROL 1
BREAK CONTROL 2
OVERLOAD DETECT 1
OVERLOAD DETECT 2
VREF

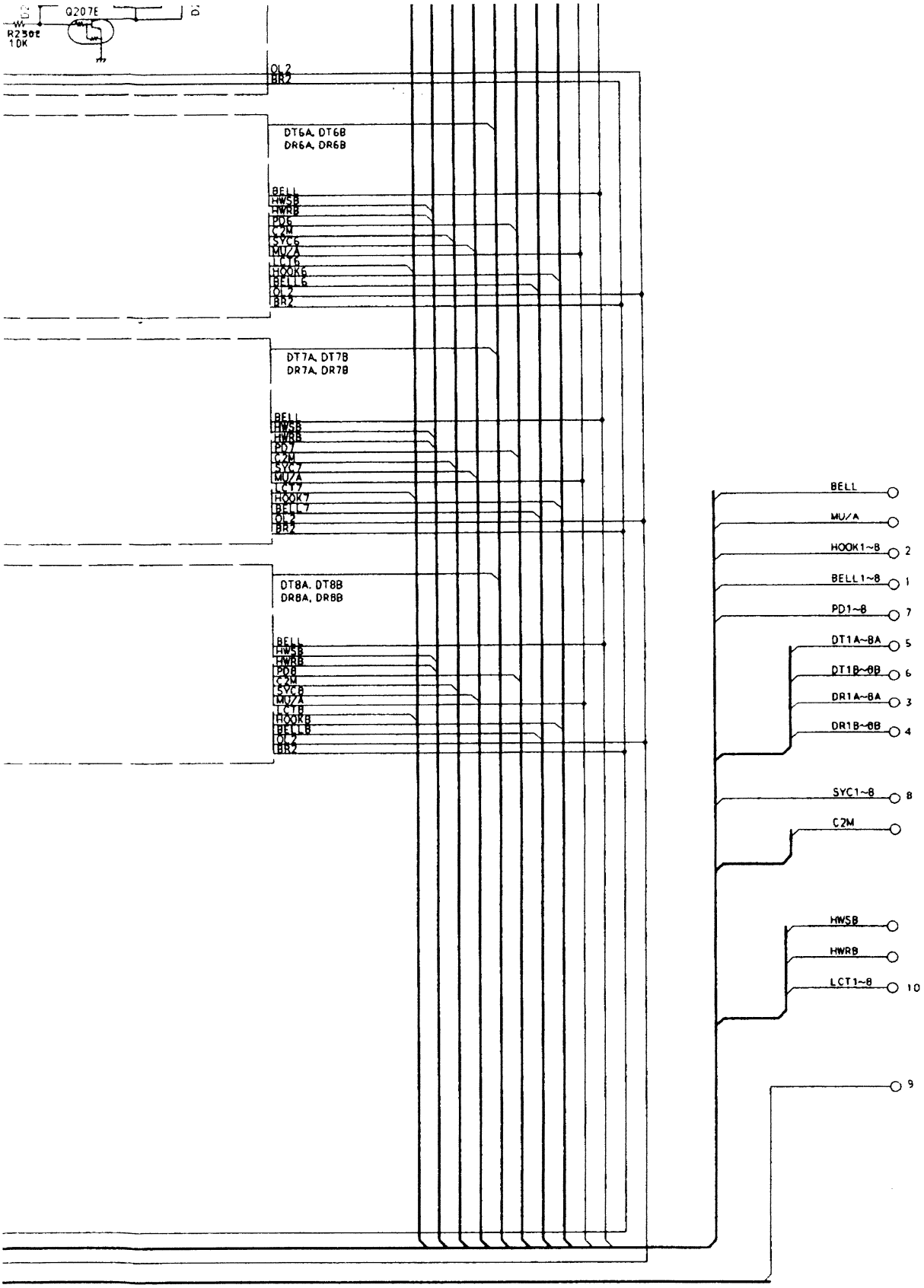
Q207E
R230E
10K
OL2
BR2
DT6A, DT6B
DR6A, DR6B
BELL
HWSB
HWRB
PD6
C2M
SYC6
MUZA
LCT6
HOOK6
BELL6
OL2
BR2
DT7A, DT7B
DR7A, DR7B
BELL
HWSB
HWRB
PD7
C2M
SYC7
MUZA
LCT7
HOOK7
BELL7
OL2
BR2
DT8A, DT8B
DR8A, DR8B
BELL
HWSB
HWRB
PD8
C2M
SYC8
MUZA
LCT8
HOOK8
BELL8
OL2
BR2
BELL
MU/A
HOOK1~8
2
BELL1~8
1
PD1~8
7
DT1A~8A
5
DT1B~8B
6
DR1A~8A
3
DR1B~8B
4
SYC1~8
8
C2M
HWSB
HWRB
LCT1~8
10
9

SCHEMATIC DIAGRAM (CPU CIRCUIT)

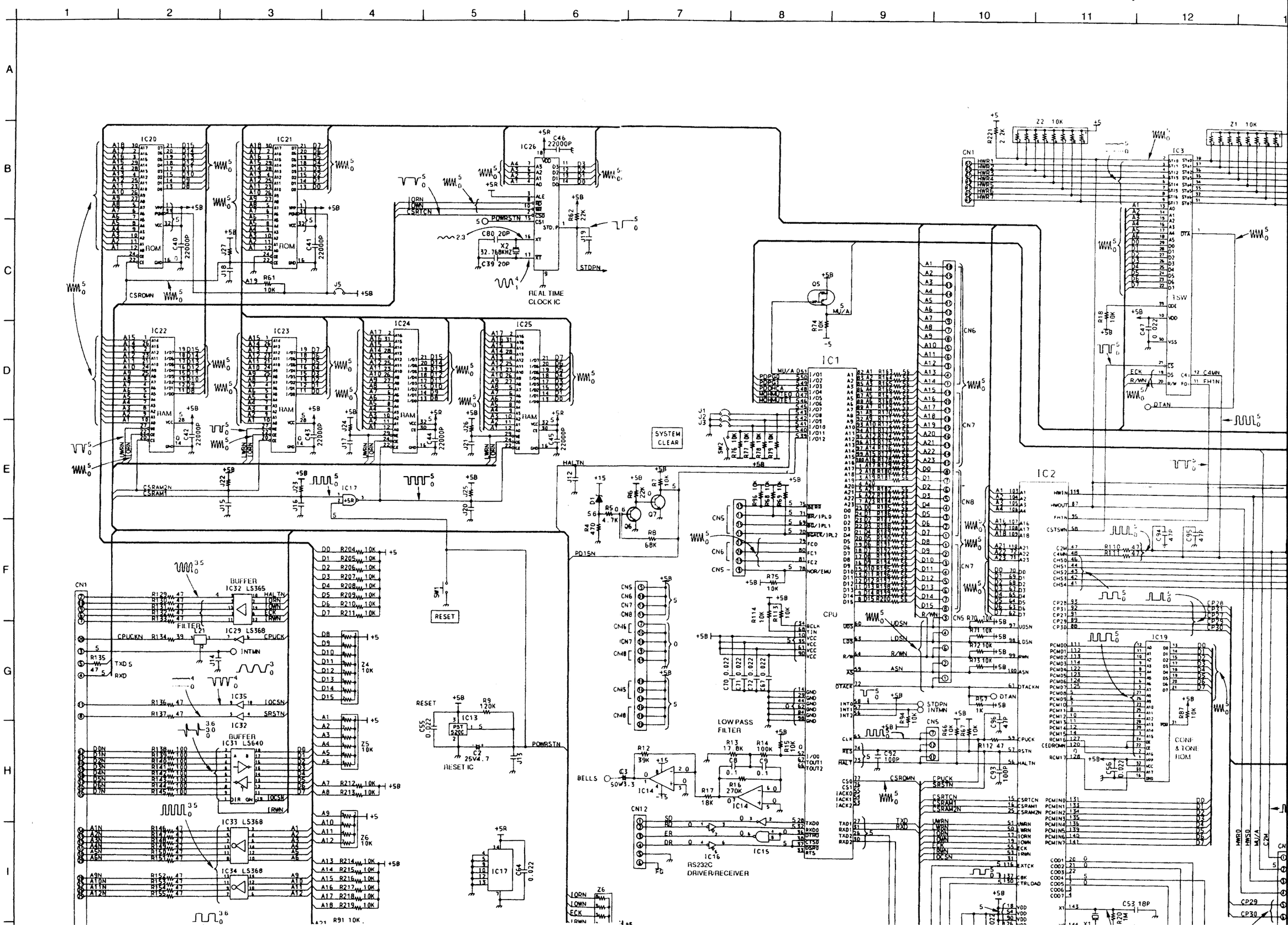

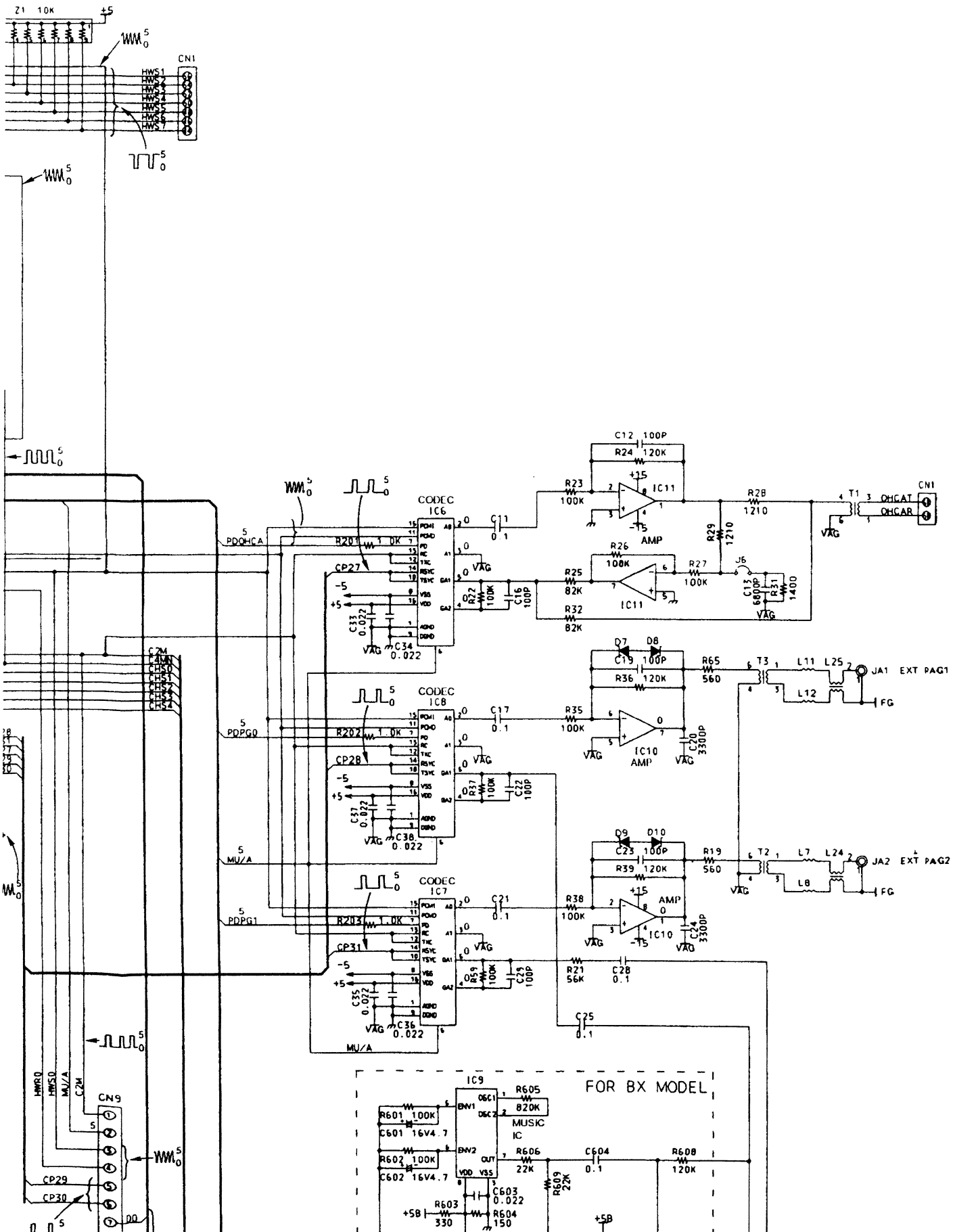
Z1 10K
CN1
HWS1
HWS2
HWS3
HWS4
HWS5
HWS6
HWS7
HWS8
CODEC IC6
CODEC IC8
CODEC IC7
PDOHCA
PDPG0
PDPG1
MU/A
R201 1.0K
R202 1.0K
R203 1.0K
CP27
CP28
CP31
C33 0.022
C34 0.022
C37 0.022
C38 0.022
C35 0.022
C36 0.022
C11 0.1
C17 0.1
C21 0.1
C16 100P
C22 100P
C29 100P
R22 100K
R37 100K
R59 100K
R23 100K
R25 82K
R32 82K
R35 100K
R38 100K
R21 56K
C28 0.1
C25 0.1
C12 100P
R24 120K
IC11
AMP
R26 100K
R27 100K
R28 1210
R29 1210
J6
C13 680P
R31 1400
VAG
T1
OHCAT
OHCAR
C19 100P
R36 120K
IC10
C20 3300P
R65 560
T3
L11
L25
L12
JA1 EXT PAG1
FG
C23 100P
R39 120K
C24 3300P
R19 560
T2
L7
L24
L8
JA2 EXT PAG2
D7
D8
D9
D10
CN9
HWR0
HWS0
MU/A
C2M
CP29
CP30
DO
FOR BX MODEL
IC9
MUSIC IC
R605 820K
R601 100K
C601 16V4.7
R602 100K
C602 16V4.7
R606 22K
C604 0.1
R608 120K
R609 22K
C603 0.022
R603 330
R604 150
+5B

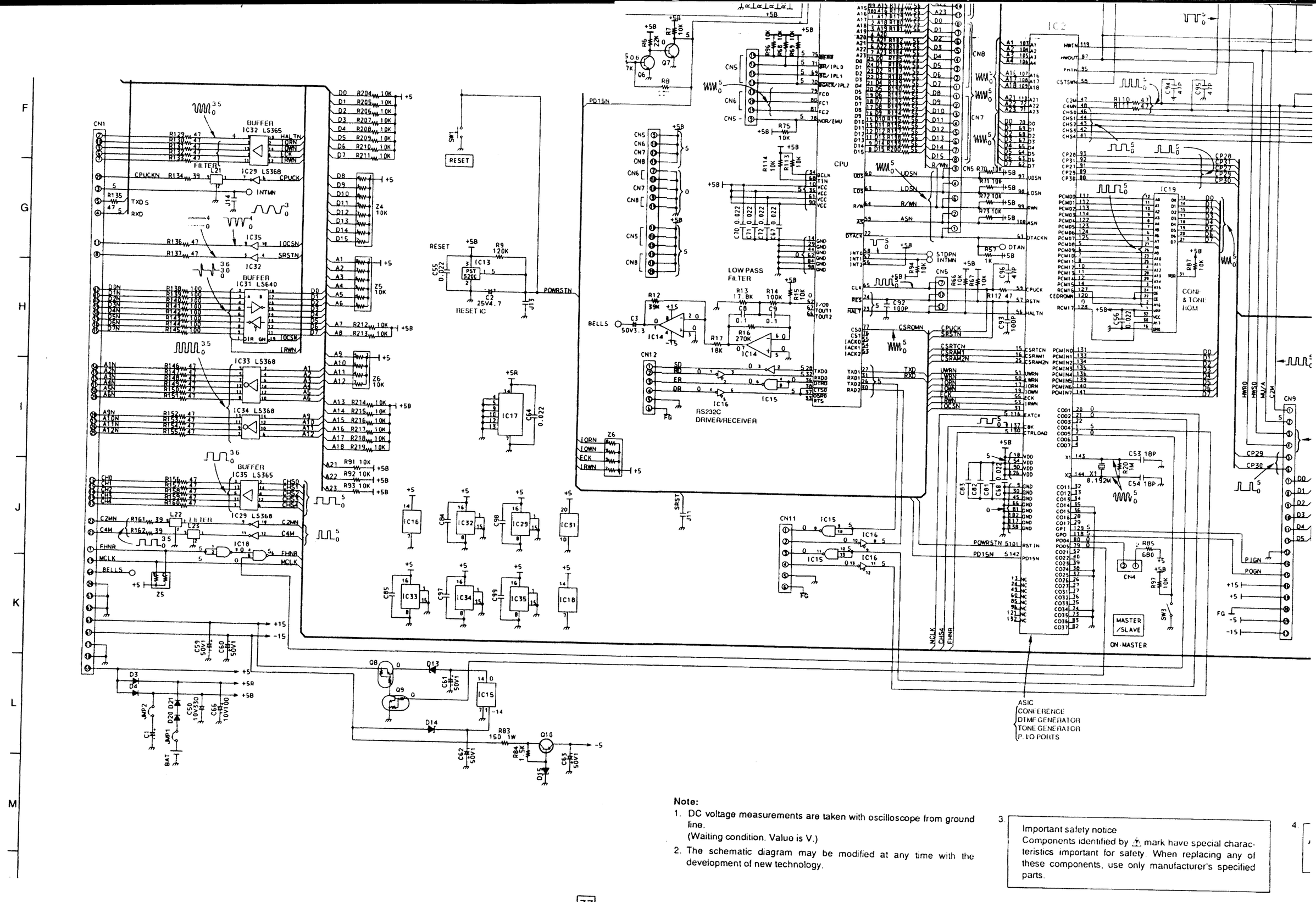

Note:

1. DC voltage measurements are taken with oscilloscope from ground line.
   (Waiting condition. Valuo is V.)
2. The schematic diagram may be modified at any time with the development of new technology.

3. Important safety notice
   Components identified by ⚠ mark have special characteristics important for safety. When replacing any of these components, use only manufacturer's specified parts.

4.

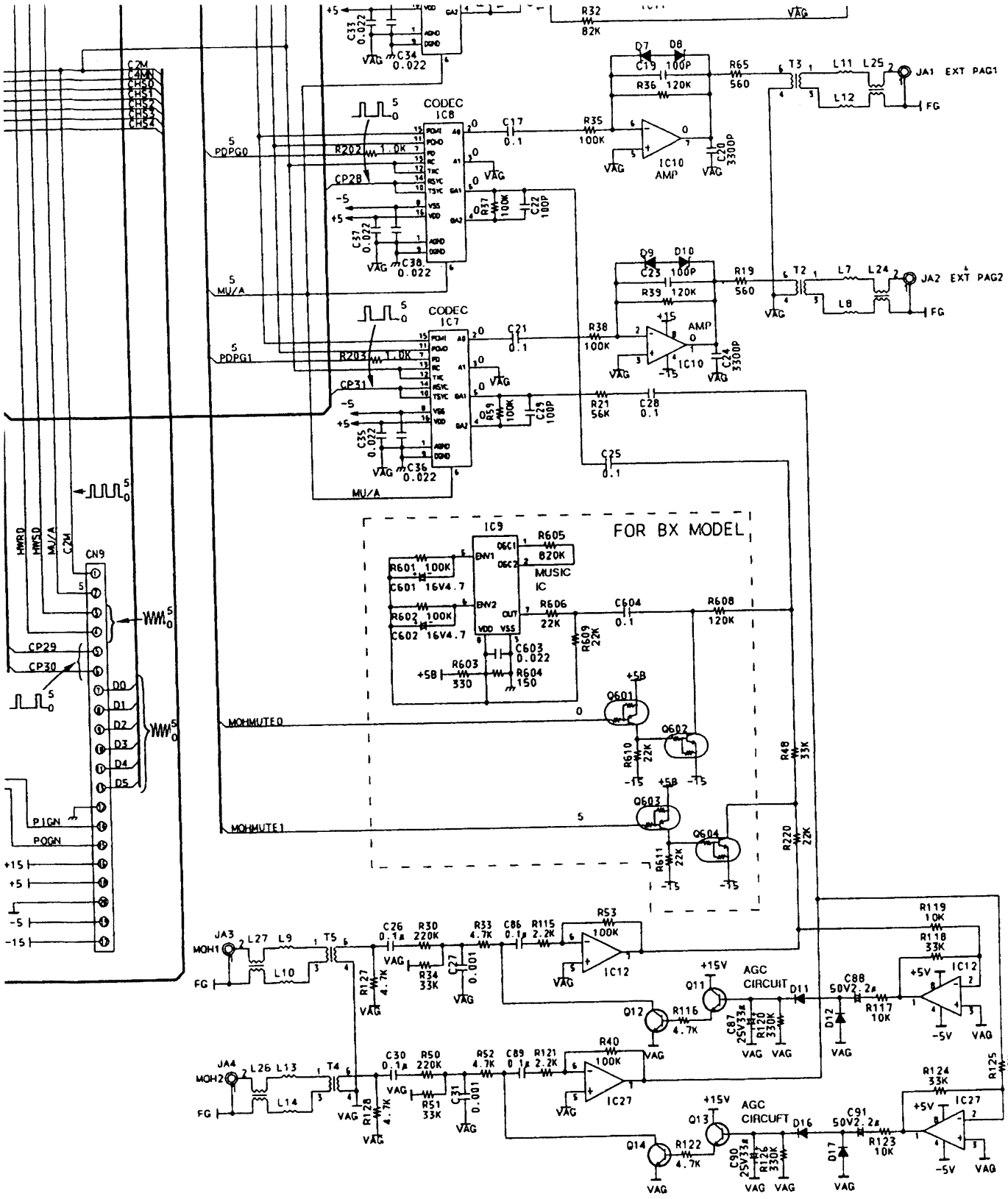

4.

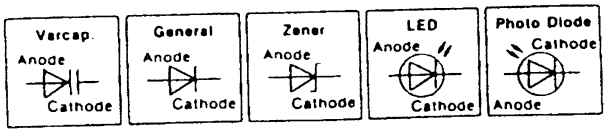

al charac-
g any of
specified

OVER LOAD DETECT

COMPARATOR

A

B

C

D

CODEC

IC201A

IC201B

AMP

HOOK DETECT

RING TRIP DETECT

SAME AS B

SAME AS B

BREAK CONTROL1

BREAK CONTROL 2

OVER LOAD DETECT 1

OVER LOAD DETECT 2

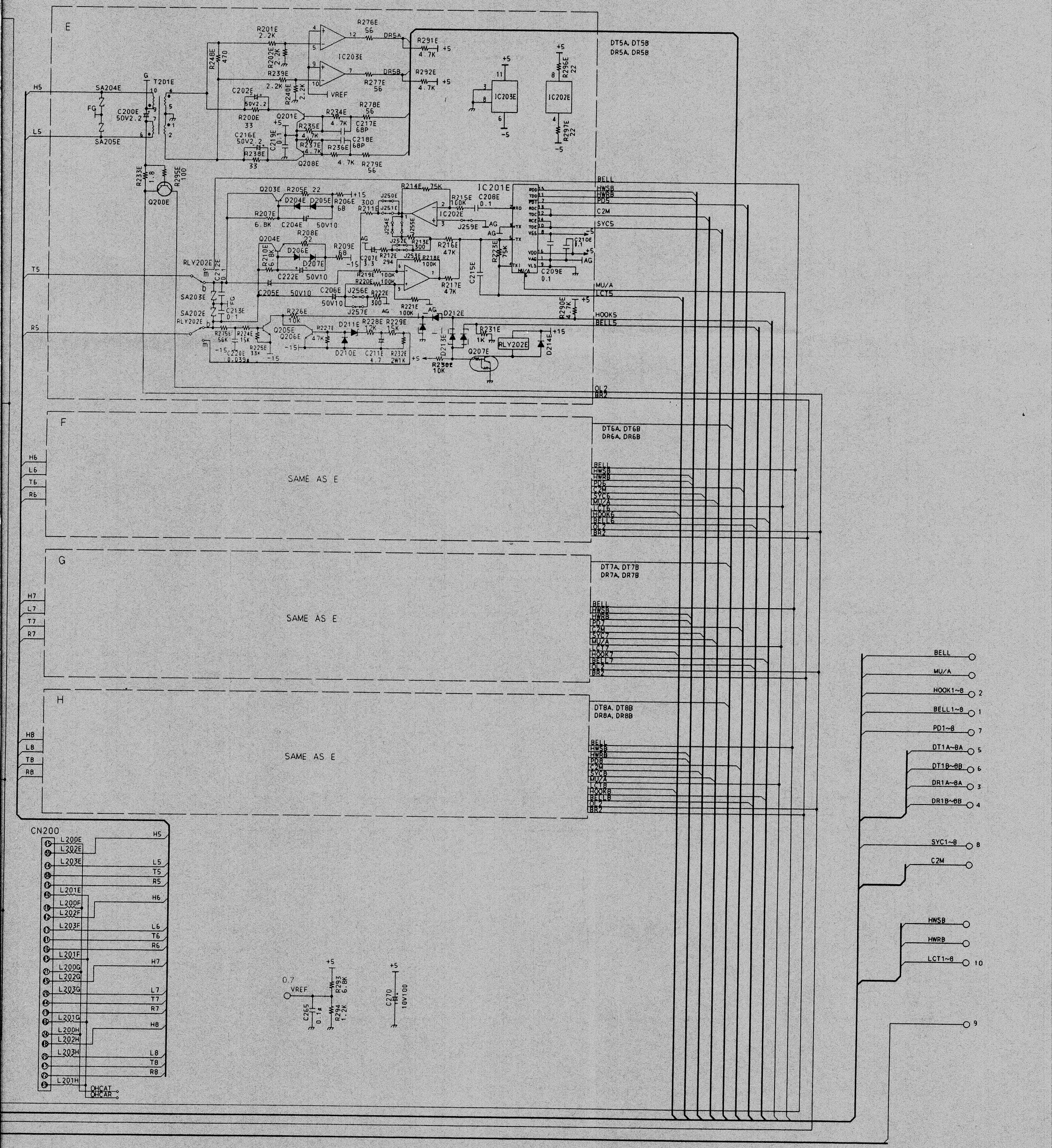
E
F
G
H
SAME AS E
SAME AS E
SAME AS E
DT5A, DT5B
DR5A, DR5B
DT6A, DT6B
DR6A, DR6B
DT7A, DT7B
DR7A, DR7B
DT8A, DT8B
DR8A, DR8B
IC201E
IC202E
IC203E
IC202E
T201E
Q200E
Q201E
Q208E
Q203E
Q204E
Q205E
Q206E
Q207E
RLY202E
SA204E
SA205E
SA203E
SA202E
VREF
BELL
HWSB
HWRB
PD5
C2M
SYC5
MU/A
LCT5
HOOK5
BELL5
OL2
BR2
H5
L5
T5
R5
H6
L6
T6
R6
H7
L7
T7
R7
H8
L8
T8
R8
CN200
OHCAT
OHCAR
BELL
MU/A
HOOK1~8
BELL1~8
PD1~8
DT1A~8A
DT1B~8B
DR1A~8A
DR1B~8B
SYC1~8
C2M
HWSB
HWRB
LCT1~8
9
10

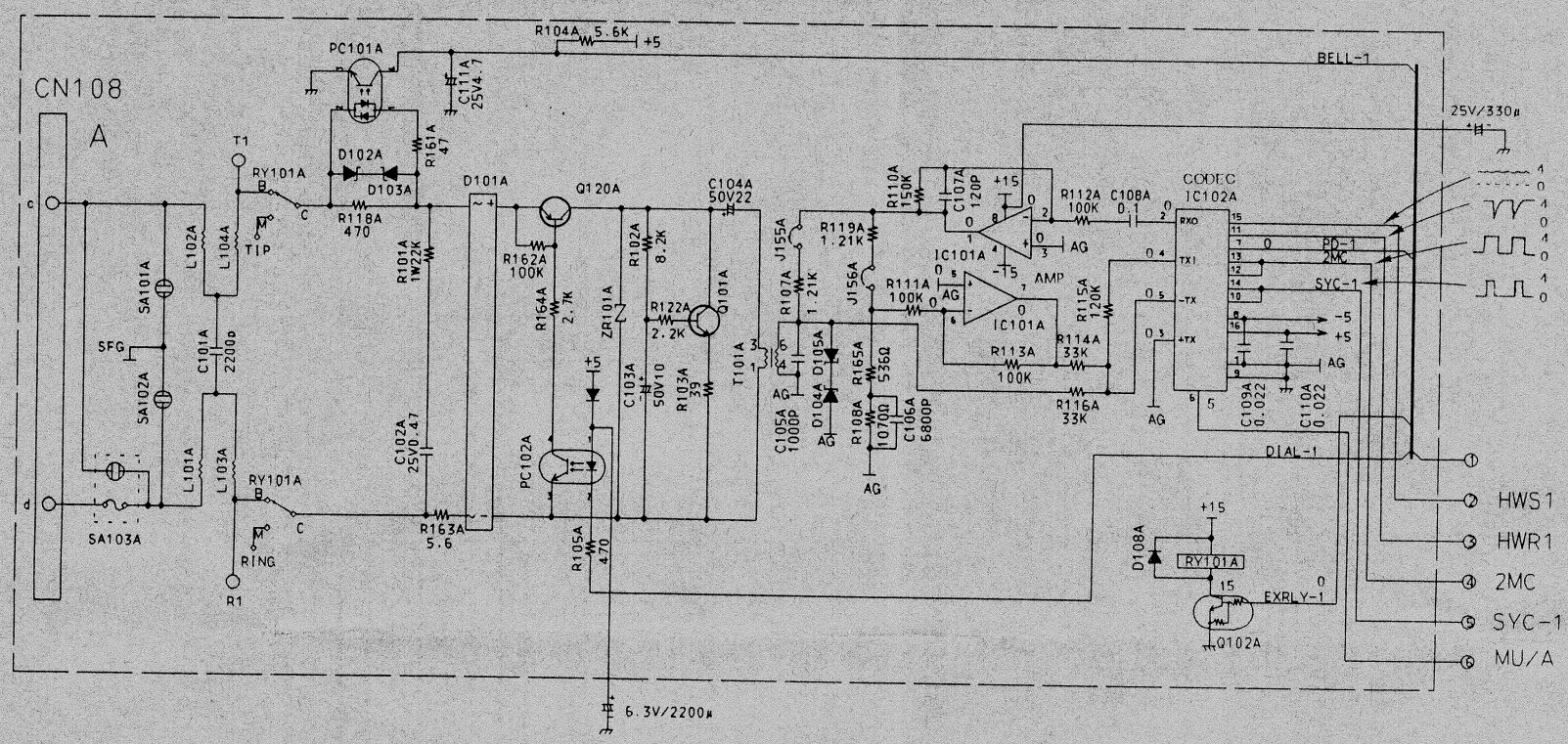
CN108
A
PC101A
R104A 5.6K
+5
BELL-1
C111A 25V4.7
R161A 47
D102A
D103A
T1
RY101A
TIP
R118A 470
D101A
Q120A
C104A 50V22
25V/330μ
R162A 100K
R164A 2.7K
ZR101A
R102A 8.2K
R122A 2.2K
Q101A
T101A
R103A 39
C103A 50V10
PC102A
C102A 25V0.47
R163A 5.6
R105A 470
6.3V/2200μ
R101A 1W22K
L102A
L104A
L101A
L103A
C101A 2200p
SA101A
SA102A
SA103A
SFG
RING
R1
J155A
J156A
R119A 1.21K
R107A 1.21K
C105A 1000P
D104A
D105A
R108A 1070Ω
R165A 536Ω
C106A 6800P
AG
R110A 150K
C107A 120P
+15
R112A 100K
C108A 0.1
CODEC
IC102A
RXO
TXI
-TX
+TX
IC101A
AMP
R111A 100K
R113A 100K
R114A 33K
R115A 120K
R116A 33K
C109A 0.022
C110A 0.022
-5
+5
PD-1
2MC
SYC-1
DIAL-1
HWS1
HWR1
2MC
SYC-1
MU/A
D108A
RY101A
EXRLY-1
Q102A
CN110
E
T5
R5

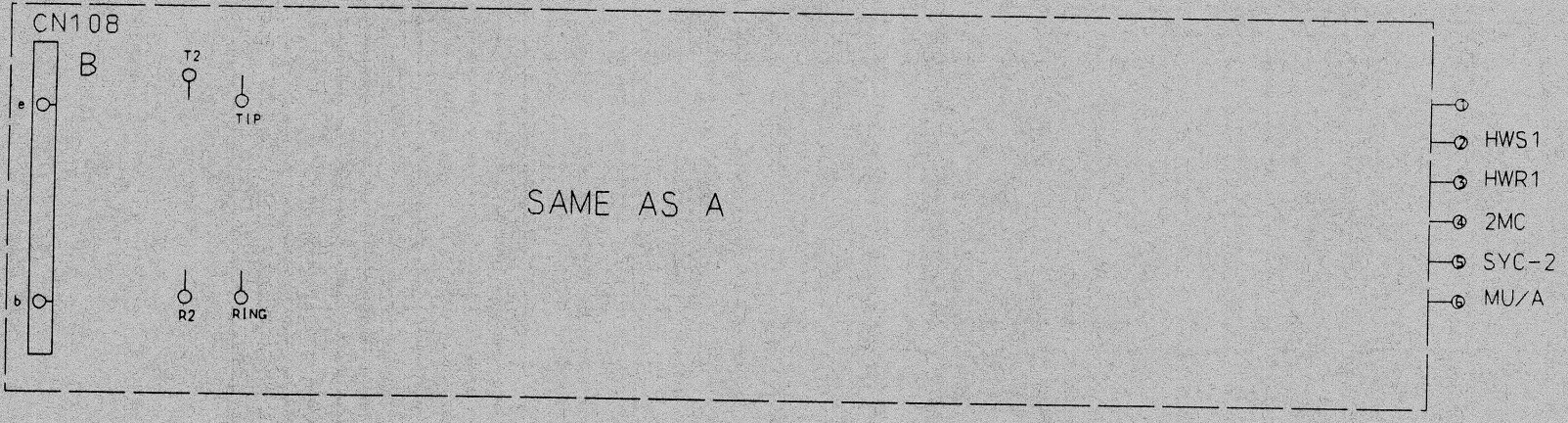
CN108
B
T2
TIP
R2
RING
SAME AS A
HWS1
HWR1
2MC
SYC-2
MU/A
CN110
F
T6
R6

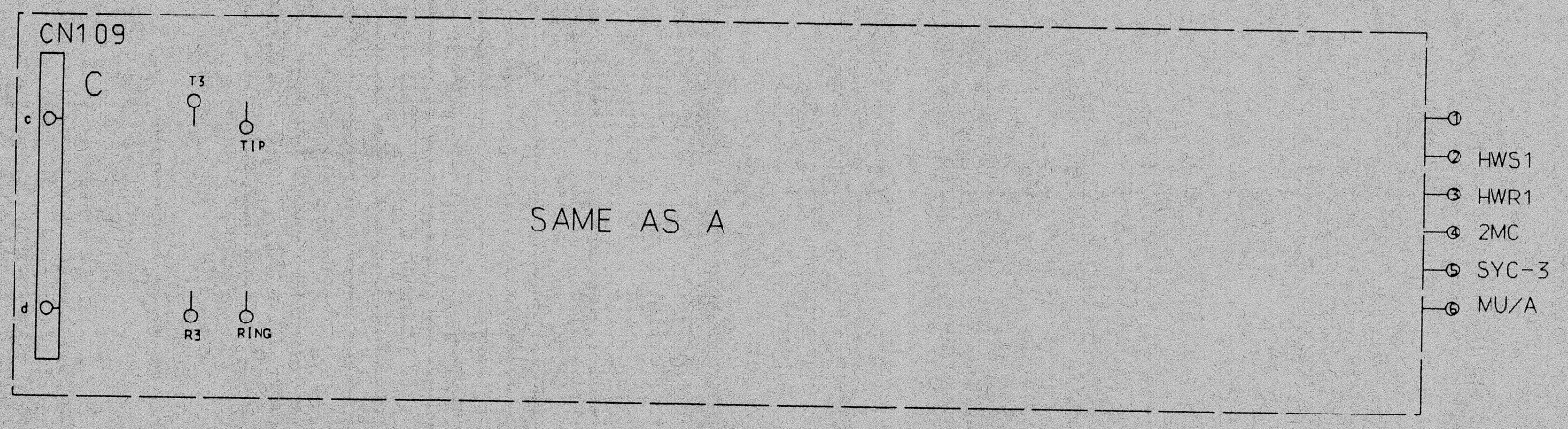
CN109
C
T3
TIP
R3
RING
SAME AS A
HWS1
HWR1
2MC
SYC-3
MU/A
CN111
G
T7
R7

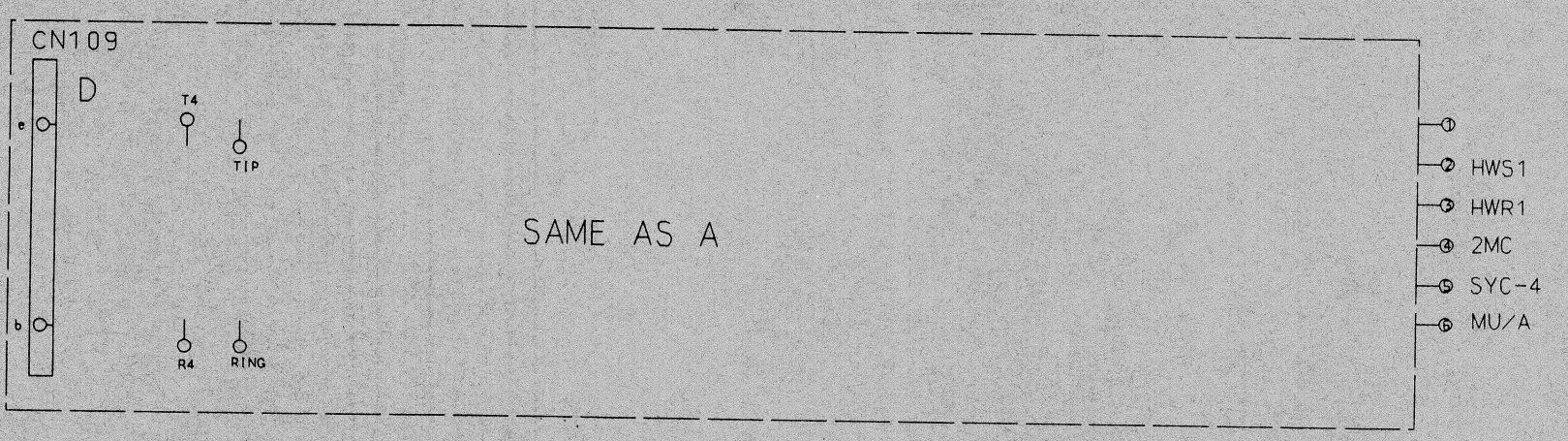
CN109
D
T4
TIP
R4
RING
SAME AS A
HWS1
HWR1
2MC
SYC-4
MU/A
CN111
H
T8
R8

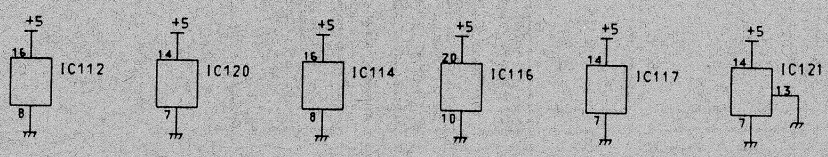
IC112
IC120
IC114
IC116
IC117
IC121
IC122
IC123
+5

GRAM (CO CIRCUIT)

10 | 11 | 12 | 13 | 14 | 15 | 16 | 17 | 18 | 19

N110
E
T5
TIP
SAME AS A
R5
RING
① HWS1
② HWR1
③ 2MC
④ SYC-5
⑤ MU/A

110
E
T6
TIP
SAME AS A
R6
RING
① HWS1
② HWR1
③ 2MC
④ SYC-6
⑤ MU/A

11
G
T7
TIP
SAME AS A
R7
RING
① HWS1
② HWR1
③ 2MC
④ SYC-7
⑤ MU/A

11
T8
TIP
SAME AS A
R8
RING
① HWS1
② HWR1
③ 2MC
④ SYC-8
⑤ MU/A

SFG
SA104
FG

IC111
IC116
IC117
IC114
IC122
IC120
IC112
IC123
IC121
CN101
CN106 CN104
CN104 CN106
CN107
CN105
CN106
CN104
Q112
Q111
C155 2200p
C120
C151 C152 C153 33μ
R160 10K
R159 10K
R161
R154 1W220
R153 1.5K
D154
C154 50V 1μ

PRINTED CIRCUIT BOARD (CO E

5 6 7 8 9 10 11

(COMPONENT VIEW)

IC102A

Pin No.	Voltage & Waveform
2–5	0
6	5
7	0
11	4 / 0
13	4 / 0
14	4 / 0
15	4 / 0

Value is V.

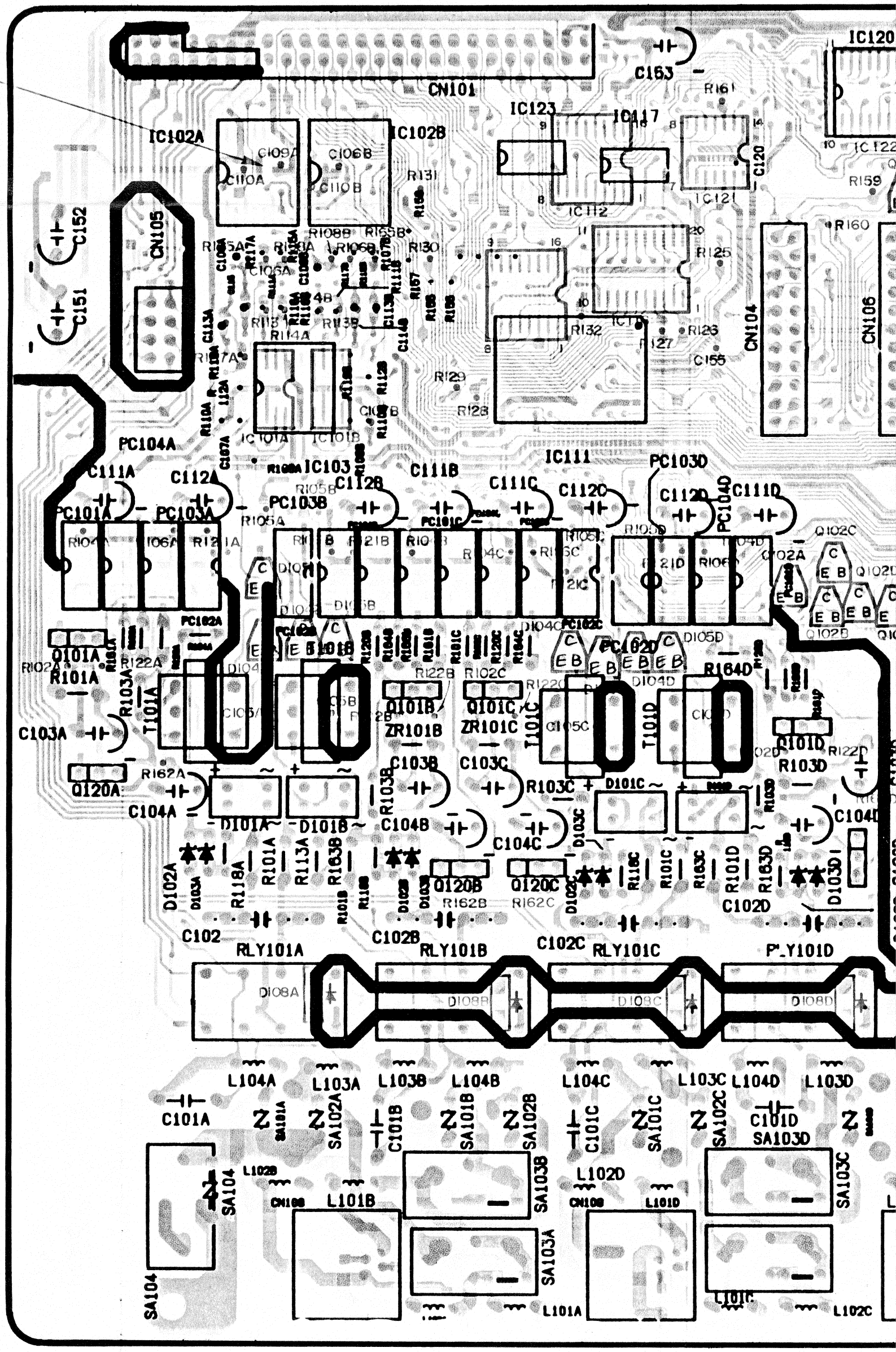

CO BOARD)

11 | 12 | 13 | 14 | 15 | 16 | 17

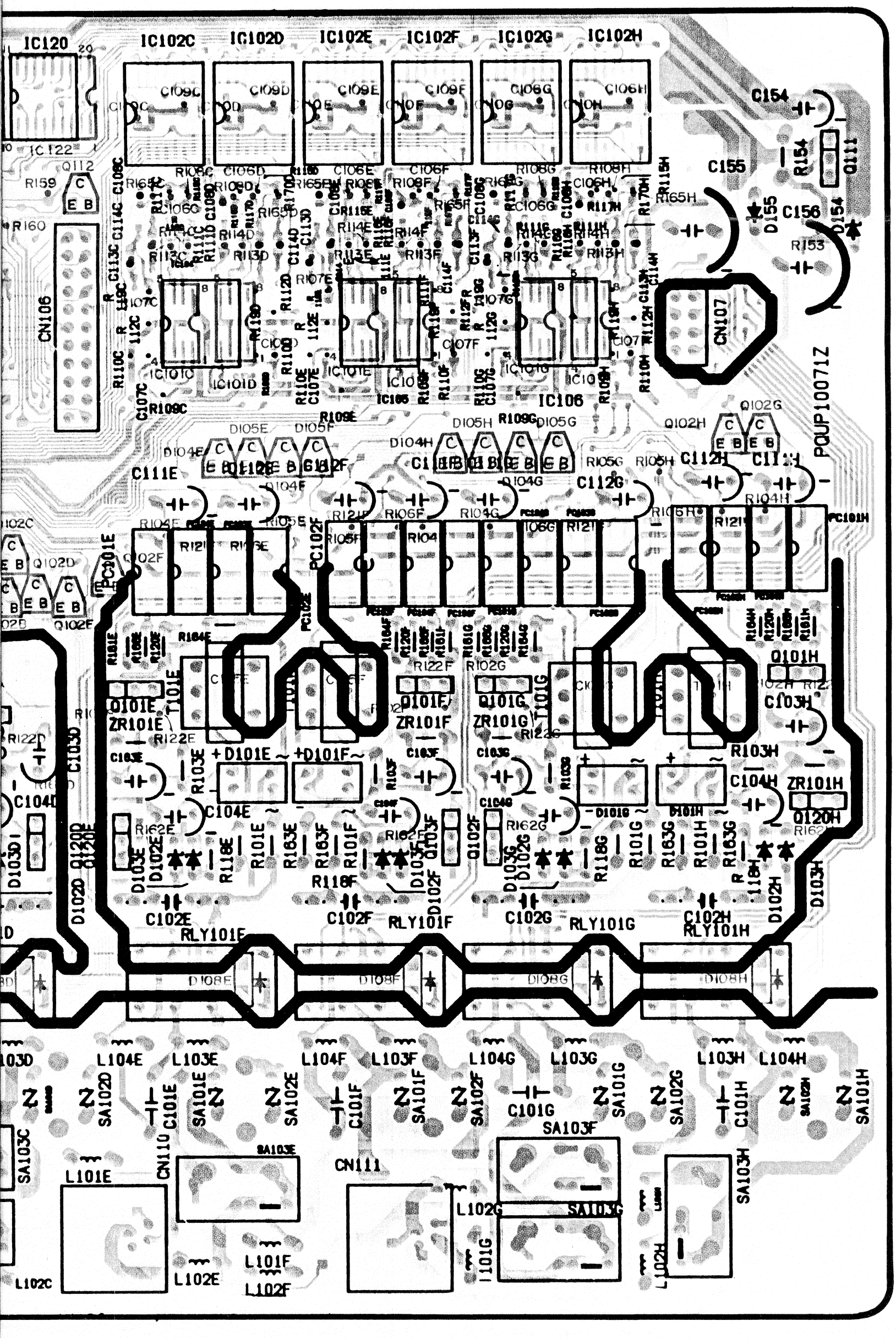

PRINTED CIRCUIT BOARD

5 | 6 | 7 | 8 | 9 | 10

(BOTTOM VIEW)

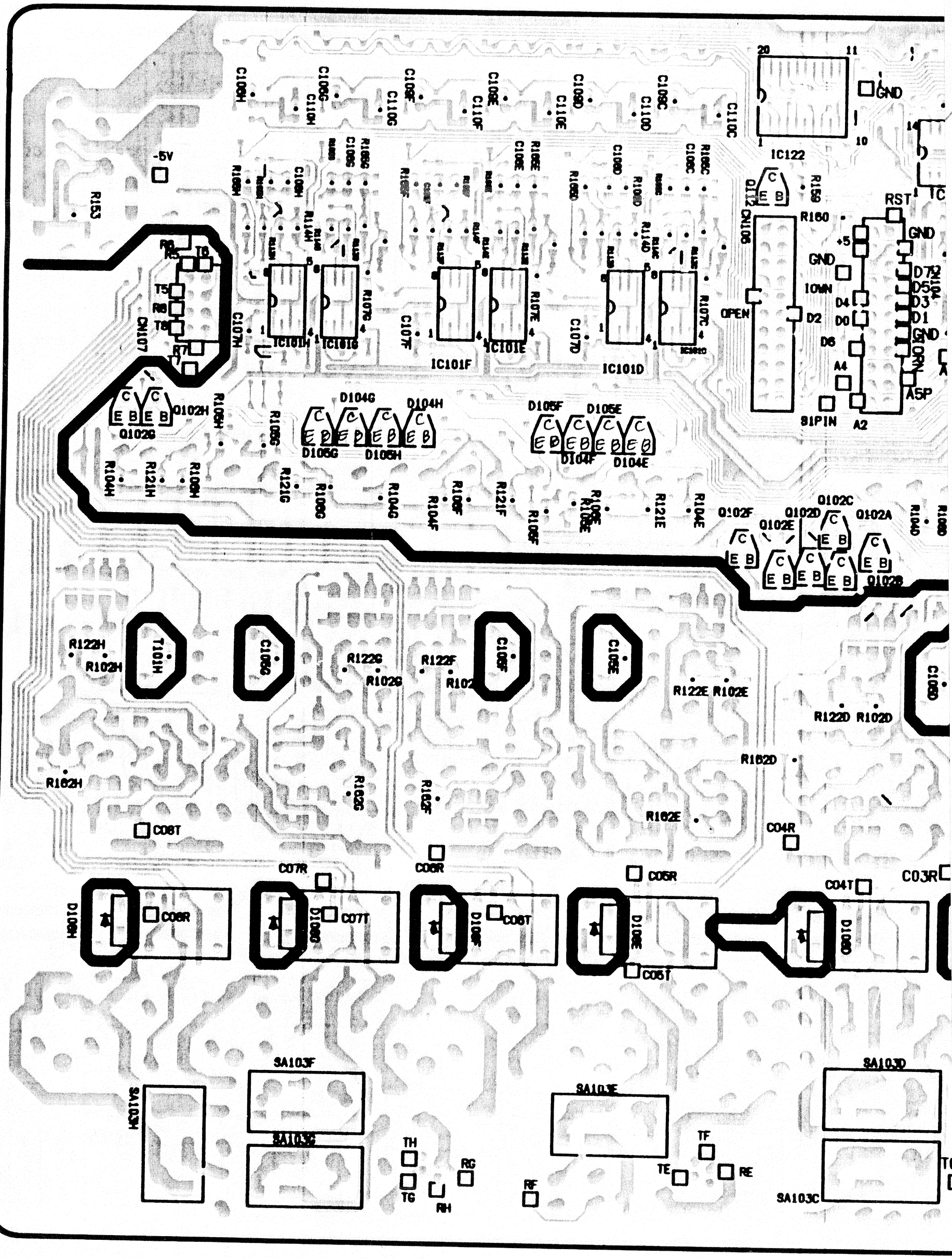

PRINTED CIRCUIT BOARD (CO BOARD)

9 10 11 12 13 14 15

(BOTTOM VIEW)

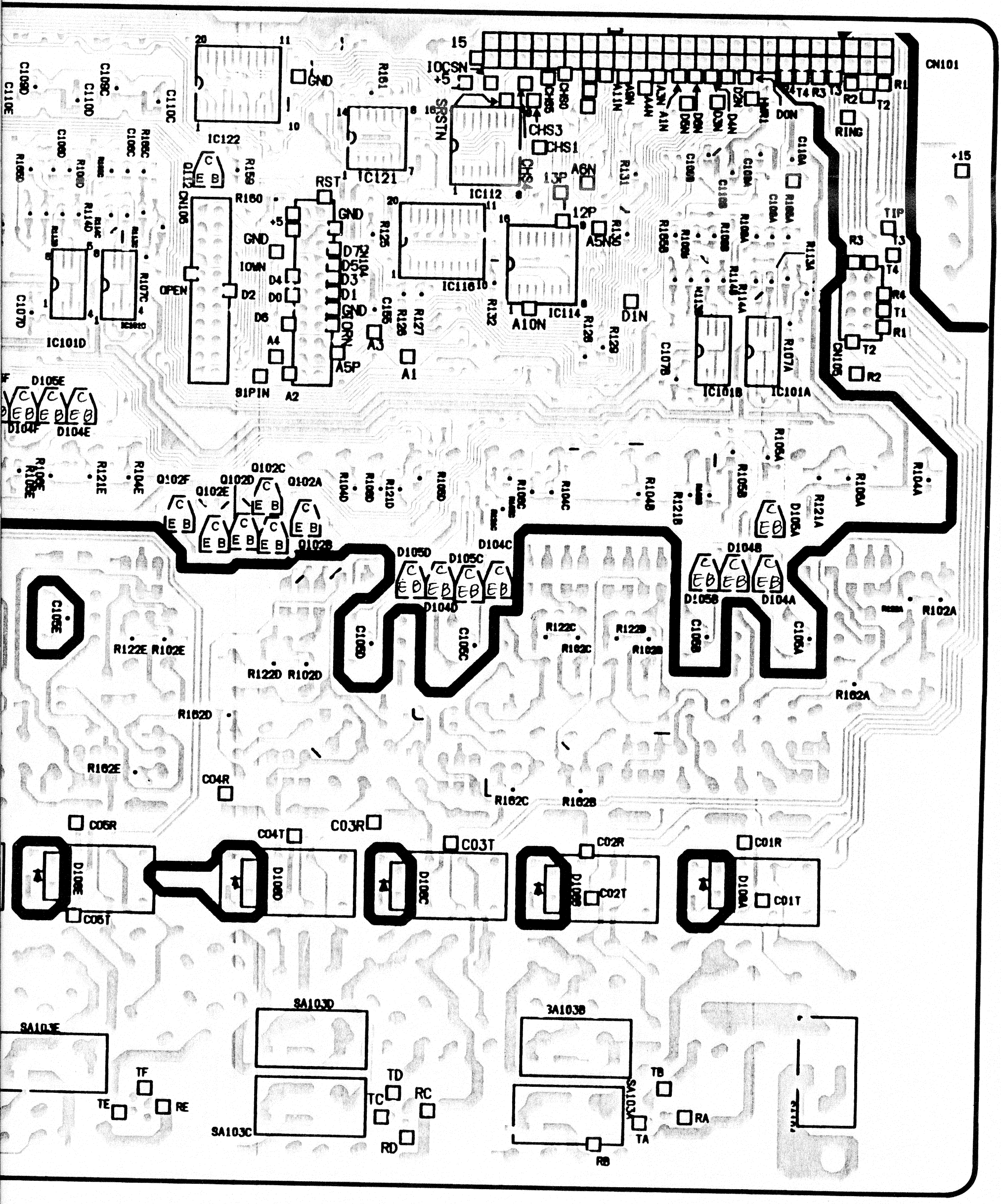

PRINTED CIRCUIT BOARD (SMDR/LED)

(COMPONENT VIEW)

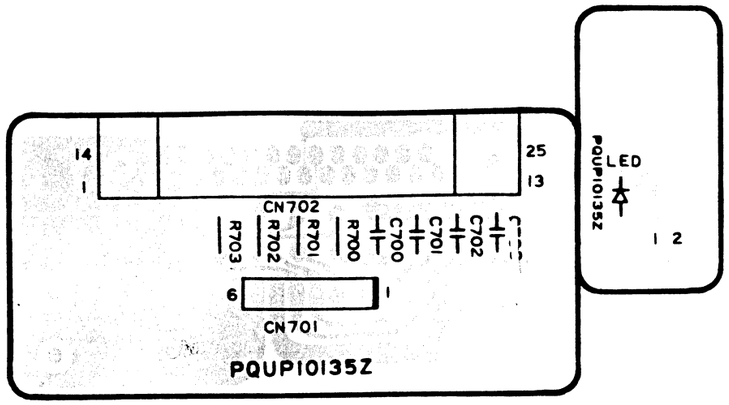

SCHEMATIC DIAGRAM (SMDR/LED)

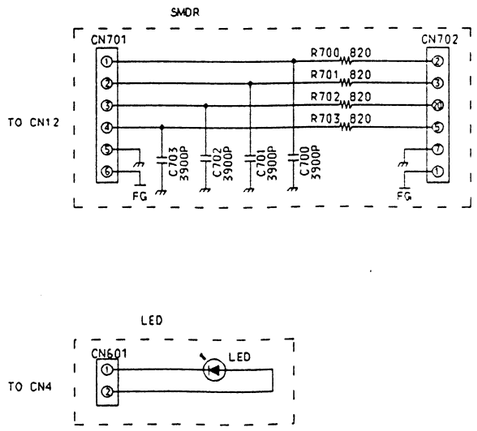

MEMO

PRINTED CIRCUIT BOARD (MOTHER BOARD)

(COMPONENT VIEW)

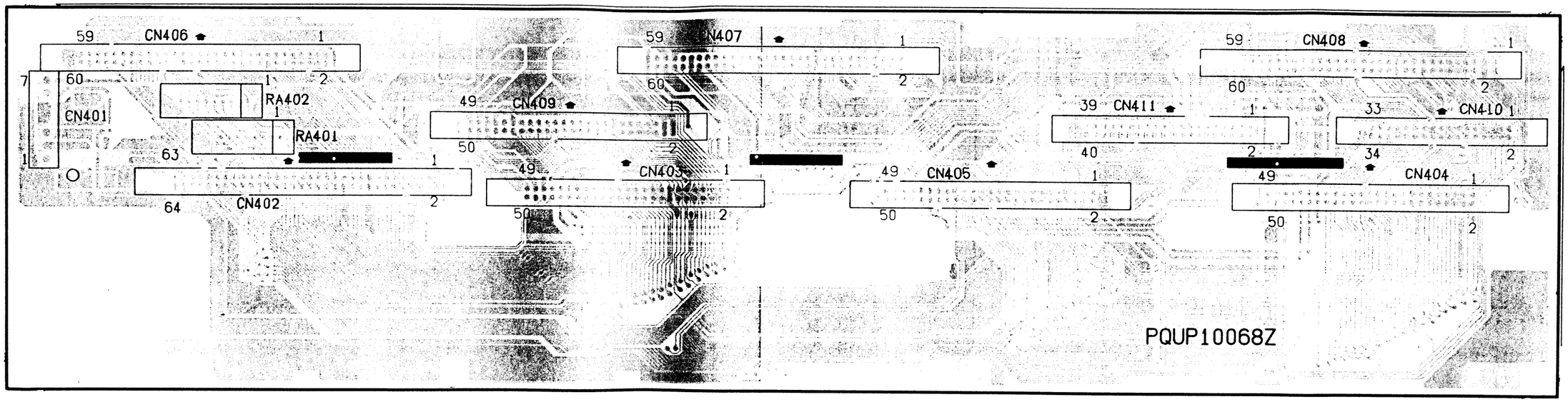

SCHEMATIC DIAGRAM (MOTHER CIRCUIT)

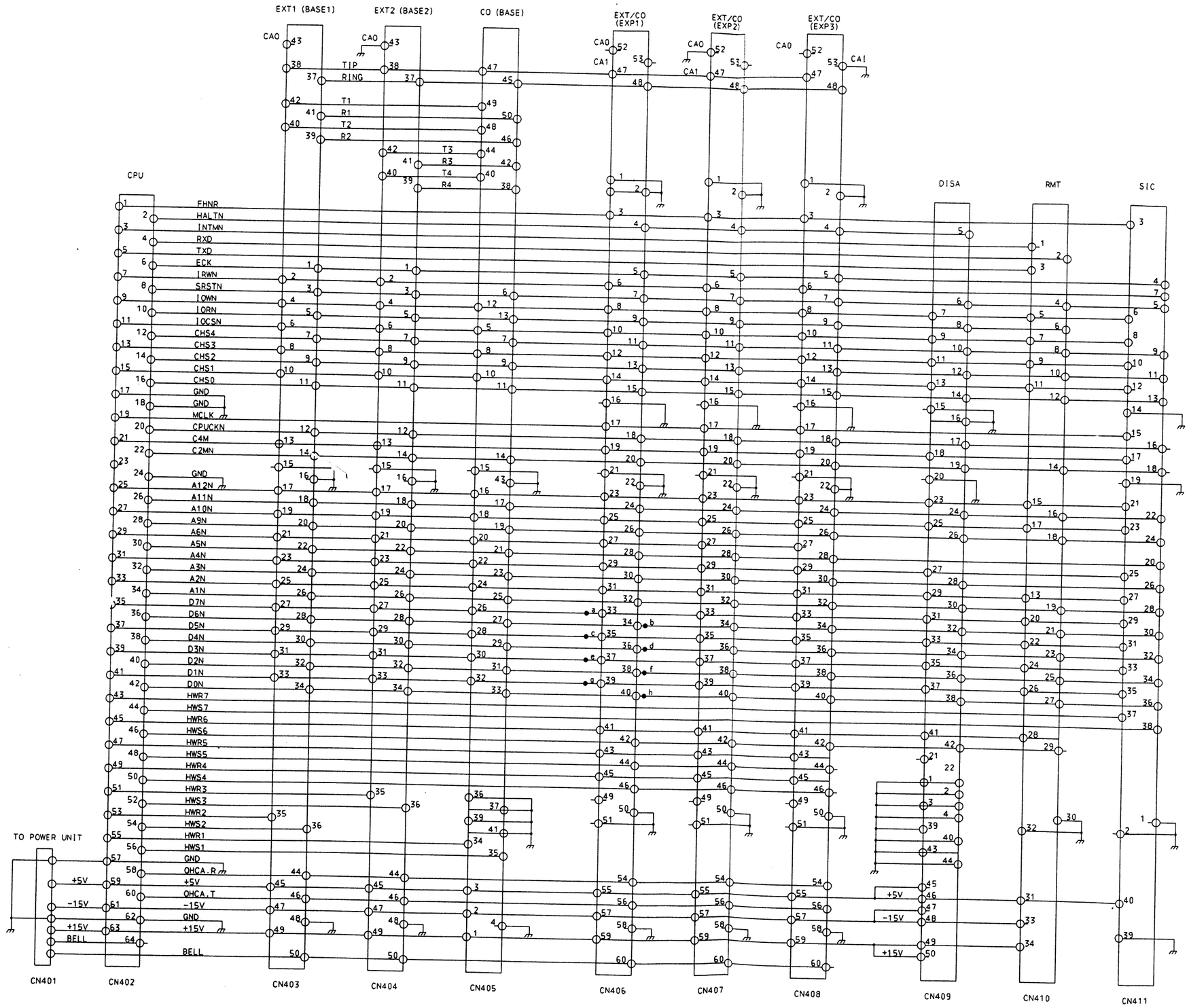

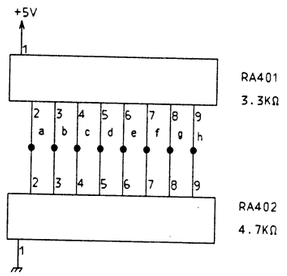

SCHEMATIC DIAGRAM (POWER SUPPLY CIRCUIT)

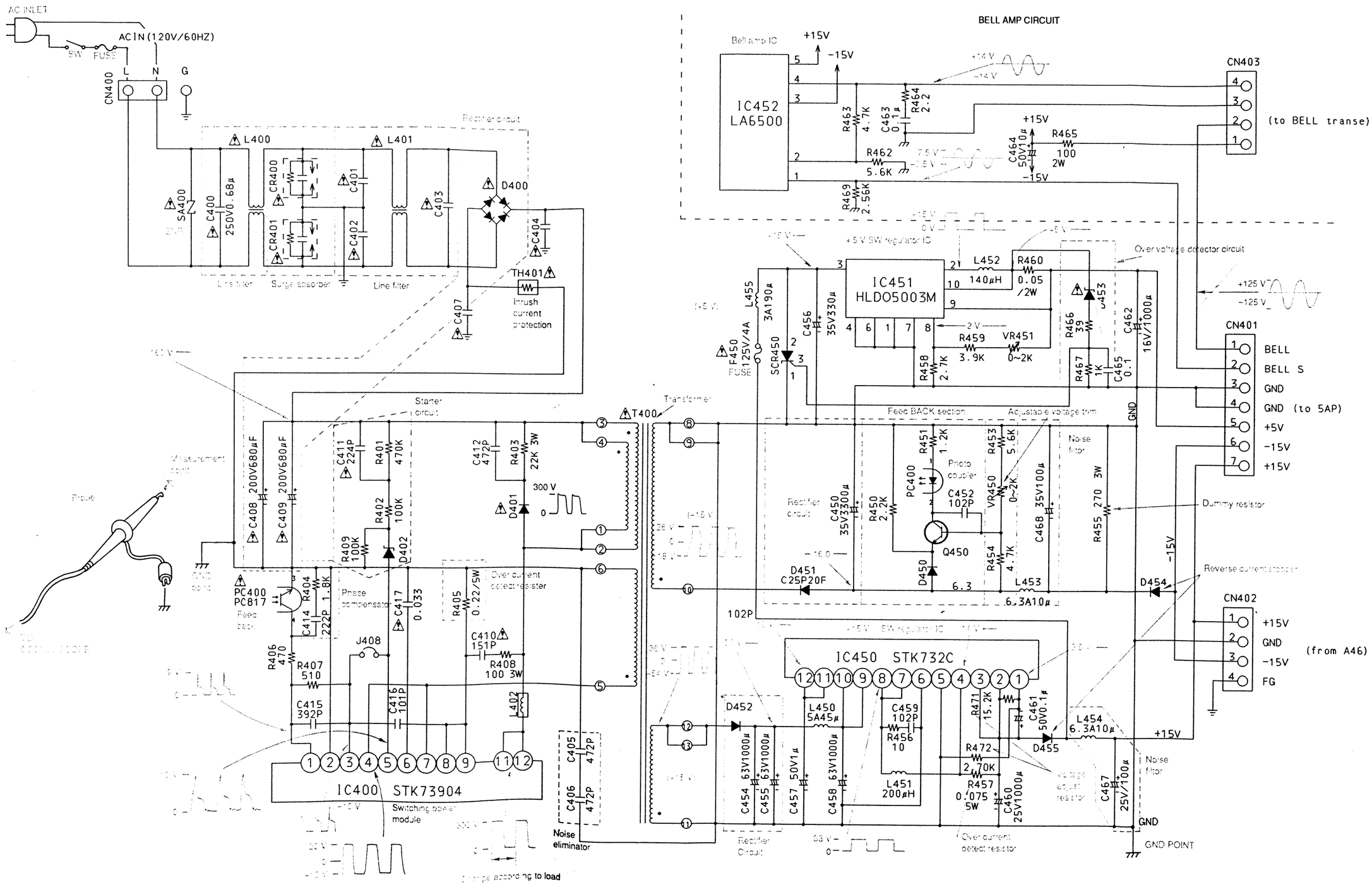

PRINTED CIRCUIT BOARD (POWER SUPPLY BOARD)

COMPONENT VIEW

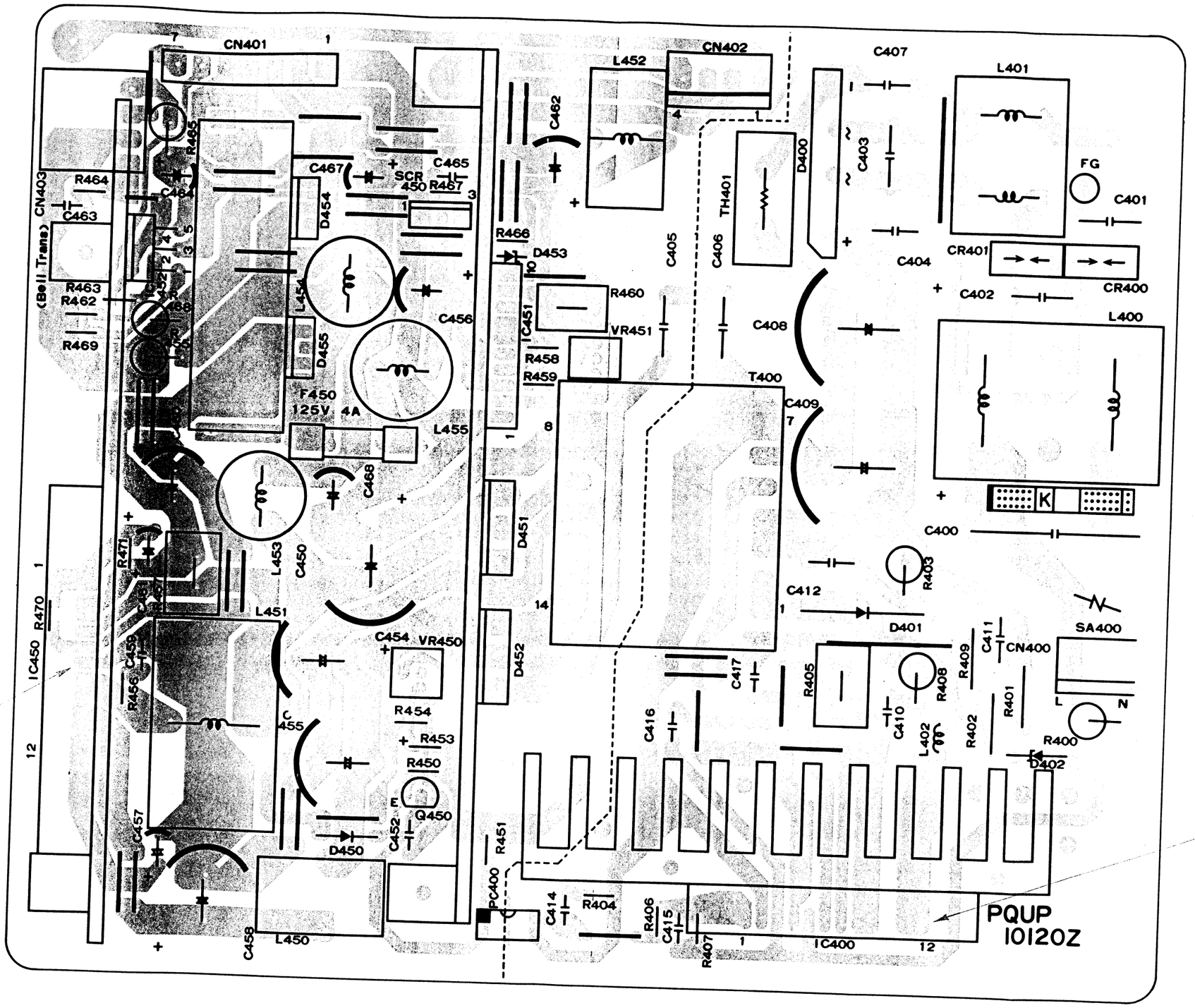

IC450

Pin No.	Waveform
1	9 V
4	
8	39 V, 0
12	18 V

Value is V.

IC400

Pin No.	Waveform
1	9 V, 0
3	10 V
4	20 V, 0, 12 V
5	10 V, 0
11	300 V, 0
12	300 V, 0

TERMINAL GUIDE OF IC'S, TRANSISTORS AND DIODES

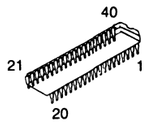 PQVIMT8980DE	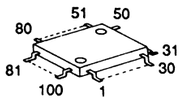 PQVI63HB110	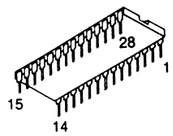 PQVIMT8952BE PQVITC5183SD	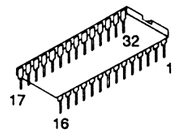 PQWI2TD1232C PQWI1D1232C1	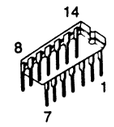 PQVISN7H00S
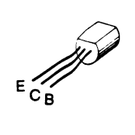 PQVIMC45503P	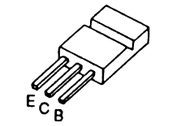 PQVI68301FCG	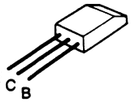 PQVINJM4558M	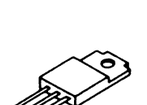 PQVISN7L14S PQVINJM319VT PQVISN7L00S PQVIHD75189P PQVIHD75188P	PQVISN7L04S PQVISN7L08S PQVISN7L86S
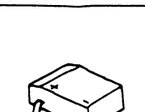 PQVIMC4051BF PQVISN7L138M PQVIMC45503W PQVISN7L365S PQVISN7L368M	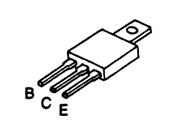 PQVI620890F	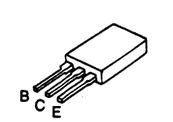 PQVISN7L273M PQVISN7L640M	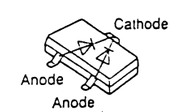 PQVI603830F	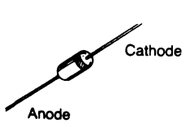 PQVICM8870FI
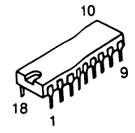 PQVIMS6242BS	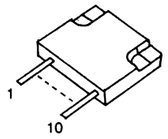 PQVIHLD05003	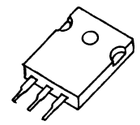 PQVDC25P30F	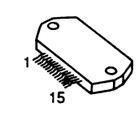 PQVISTK73904	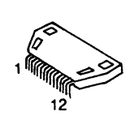 PQVISTK732C
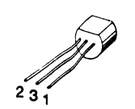 PQVIPS520C	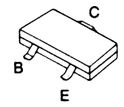 PQVTDTC143EK 2SB1218A, 2SD1819A PQVTDTC143E UN5113	MA3047 2SC2412K PQVTDTA144EK 2SA1576	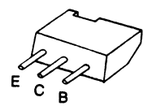 2SD1994A 2SB1218A 2SB1322	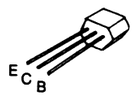 2SA933
2SC4641 2SC2878	2SD2137	2SA1627	2SD1897	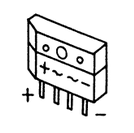 PQVDD5SB40
PQVDS1YB40F1	PQVILA6500	PQVDD10SC4M	MA151WK	1SS181, MA723

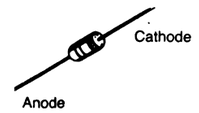 MA4091, MA4039 MA4057M, MA4030 MA4056	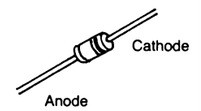 RLS71	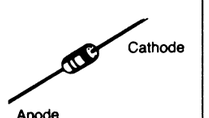 MA4068 2SC2412K	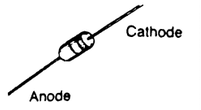 PQVDRD6.2FB	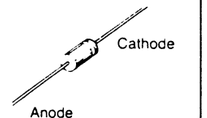 PQVDAK03
PQVDHZS2B1	PQVDERD3805L			

EXTENSION CABLE FOR SERVICING

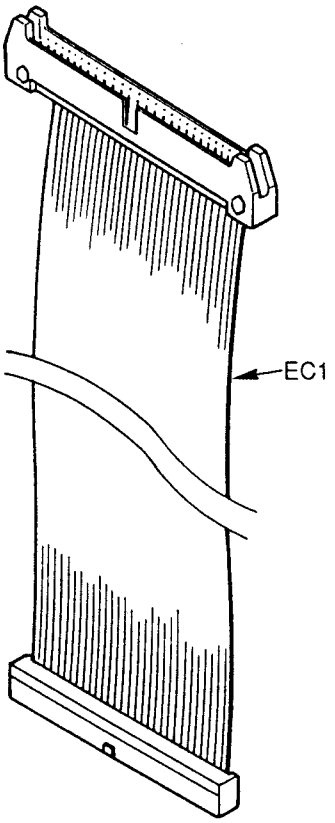

(64 Pin Cord)

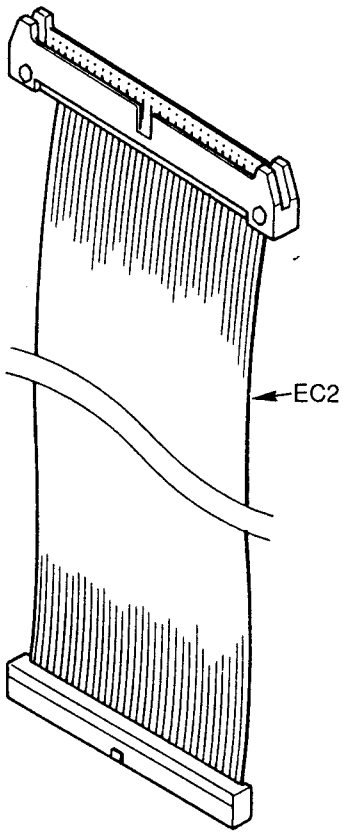

(60 Pin Cord)

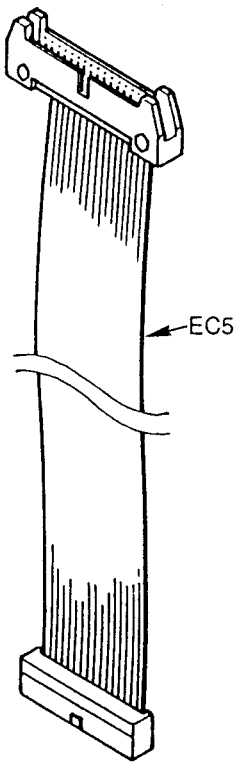

(34 Pin Cord)

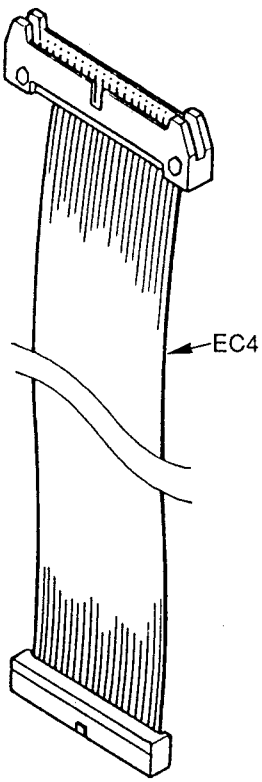

(40 Pin Cord)

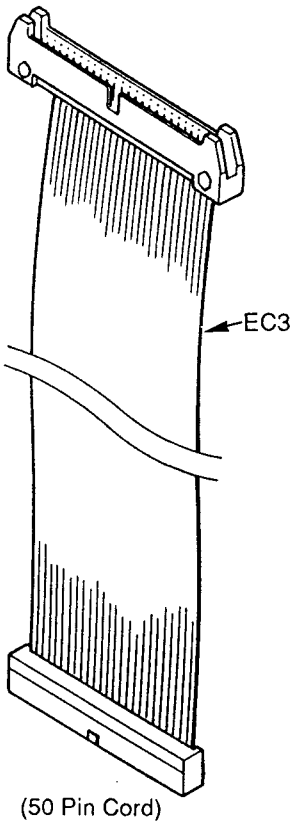

(50 Pin Cord)

CABINET AND ELECTRICAL PARTS LOCATION

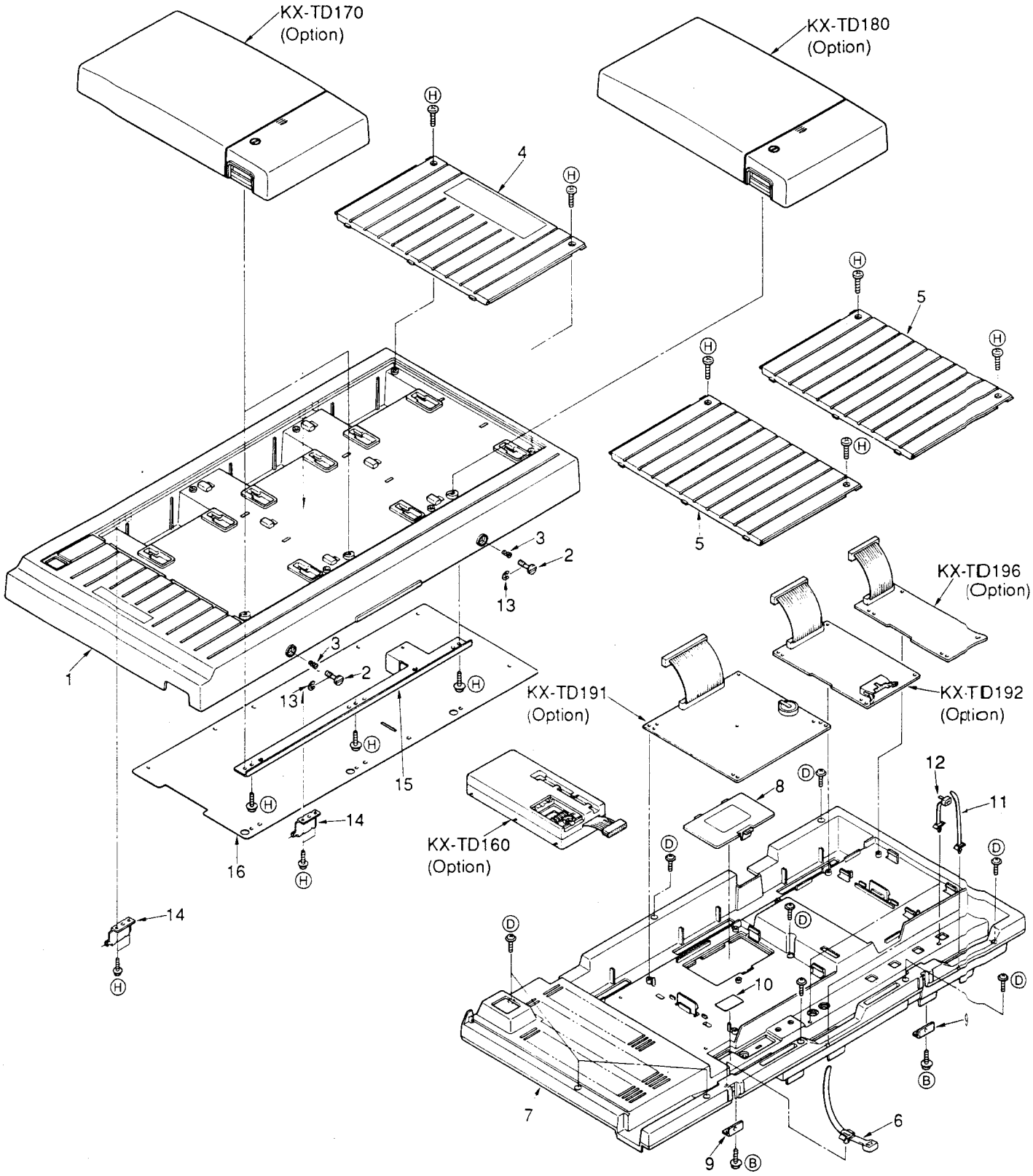

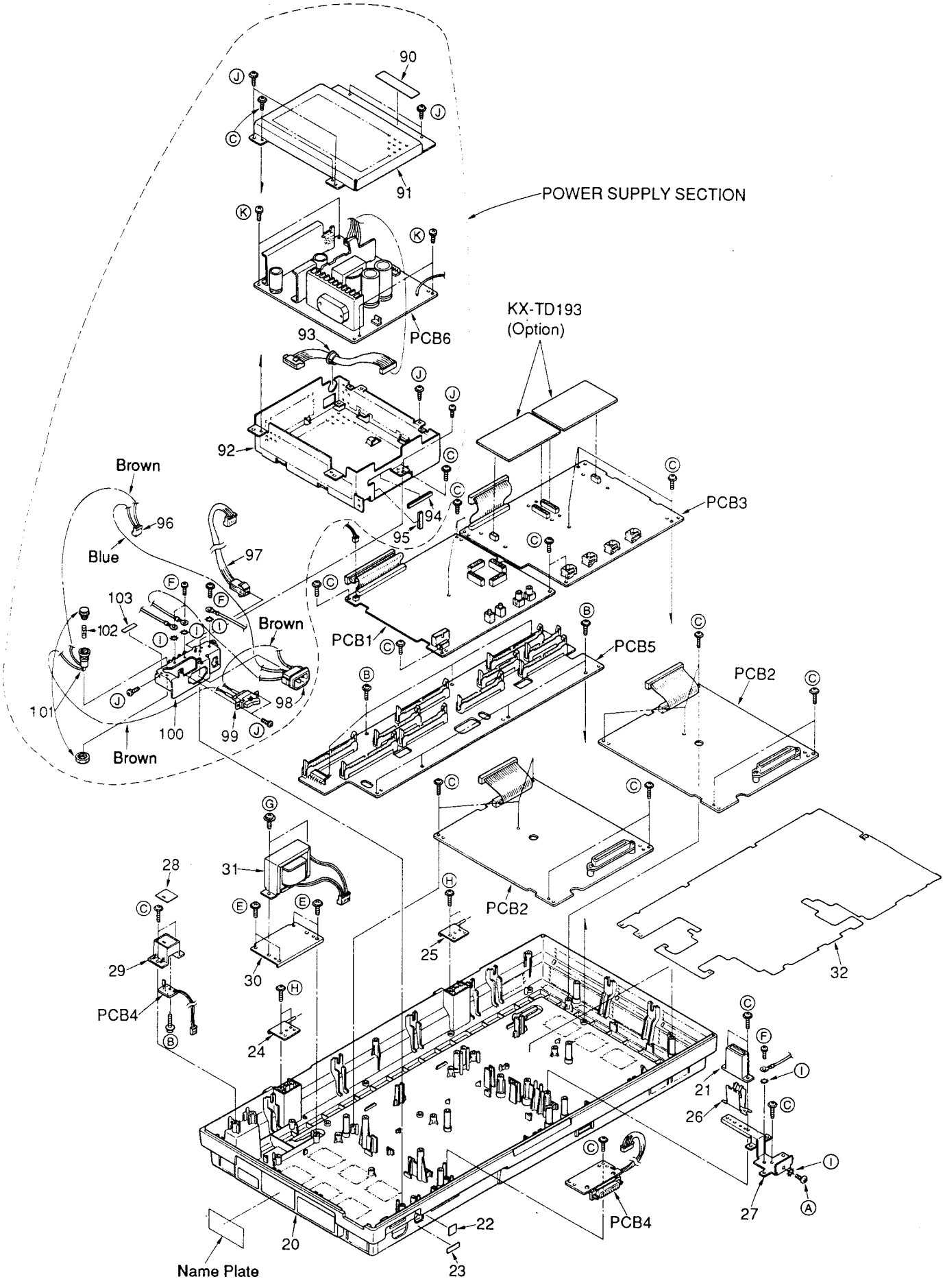
90
91
POWER SUPPLY SECTION
PCB6
93
KX-TD193
(Option)
92
94
95
PCB3
Brown
96
Blue
97
103
102
101
100
99
98
Brown
Brown
PCB1
PCB5
PCB2
PCB2
28
31
29
30
PCB4
24
25
32
21
26
27
PCB4
22
20
23
Name Plate

ACTUAL SIZE OF SCREWS AND WASHER

Ref. No.	Part No.	Figure
Ⓐ	XSN4D8FN	
Ⓑ	XTW3+S10P	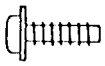
Ⓒ	XTW3+S12P	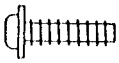
Ⓓ	XTW3+S14P	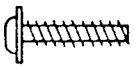
Ⓔ	XTW4+12S	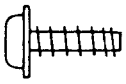
Ⓕ	XYN4+C8	
Ⓖ	XYN4+F8	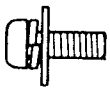
Ⓗ	XTB3+10GFN	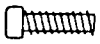
Ⓘ	XWC4B	
Ⓙ	XYN3+C6	
Ⓚ	XYN3+F6	

ACCESSORIES AND PACKING MATERIALS

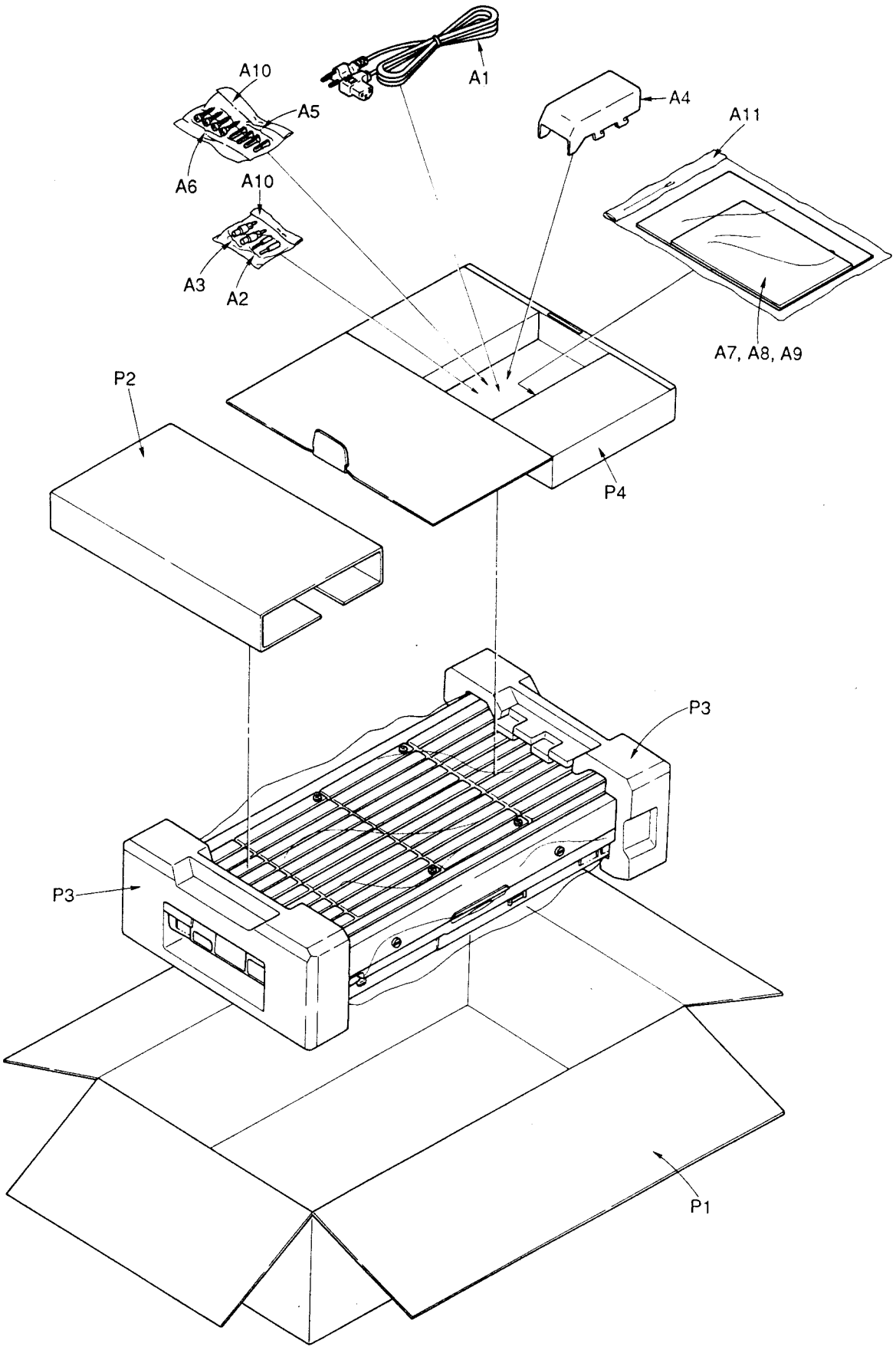

This replacement parts list is for CANADA version only. Refer to the simplified manual (cover) for other areas.

REPLACEMENT PARTS LIST

Model KX-TD1232C

Notes:

1. The marking (RTL) indicates that the Retention Time is limited for this item. After the discontinuation of this assembly in production, the item will continue to be available for a specific period of time. The retention period of availability is dependent on the type of assembly, and in accordance with the laws governing part and product retention. After the end of this period, the assembly will no longer be available.
2. Important safety notice.
   Components identified by the ⚠ mark special characteristics important for safety.
   When replacing any of these components, use only manufacturer's specified parts.
3. The S mark indicates service standard parts and may differ from production parts.
4. RESISTORS & CAPACITORS
   Unless otherwise specified.
   All resistors are in ohms (Ω) k=1000Ω, M=1000kΩ
   All capacitors are in MICRO FARADS(μF) P= μμF
   *Type &Wattage of Resistor

Type

ERC:Solid	ERX:Metal Film	PQRD:Carbon
ERD:Carbon	ERG:Metal Oxide	PQRQ:Fuse
PQ4R:Chip	ERO:Metal Film	ERF:Wire Wound

Wattage

10,16,18:1/8W	14,25,S2:1/4W	12,50,S1:1/2W	1:1W	2:2W	5:5W

*Type & Voltage of Capacitor

Type

ECFD:Semi-Conductor	ECCD,ECKD,PQCBC,PQVP : Ceramic
ECQS:Styrol	ECQM,ECQV,ECQE,ECQU,ECQB : Polyester
PQCBX,ECUV:Chip	ECEA,ECSZ,ECOS : Electrolytic
ECMS:Mica	ECQP : Polyproplylene

Voltage

ECQ Type	ECQG ECQV Type	ECSZ Type	Others	
1H: 50V	05: 50V	OF:3.15V	OJ :6.3V	1V :35V
2A:100V	1:100V	1A:10V	1A :10V	50,1H:50V
2E:250V	2:200V	1V:35V	1C :16V	1J :63V
2H:500V		OJ:6.3V	1E,25:25V	2A :100V

Ref. No.	Part No.	Part Name & Description	Pcs
		CABINET & ELECTRICAL PARTS	
1	PQKE10002Z1	TOP COVER	1
2	PQHD10011Z	SCREW	2
3	PQUS141Z	COIL SPRING	2
4	PQKV10006Z1	COVER-A, FRONT	1
5	PQKV10005Z1	COVER-B, FRONT	2
6	PQHR10031Z	CLAMPER-A	1
7	PQKF10018Z1	INSIDE COVER	1
8	PQKK10018Y1	LID, ROM	1
9	PQMH10008Z	ANGLE, FRONT COVER	2
10	PQQT10125Z	CAUTION LABEL-A	1
11	PQHR10028Z	CLAMPER-B	2
12	PQHR10029Z	CLAMPER-C	2
13	XUC3VW	E-RING	2
14	PQMH10009Z	HINGE-A	2
15	PQMC10010Z	ANGLE, FG (TOP COVER)	1
16	PQMC10064Z	SHEET, TOP COVER	1
20	PQKM10021Z1	CABINET BODY	1
21	PQHR10032Z	COVER, FG SPRING	1
22	PQQT10470Z	CAUTION LABEL-B	1
23	PQQT10126Z	CAUTION LABEL-C	1
24	PQMH10010Y	HINGE-B	1
25	PQMH10010Z	HINGE-C	1
26	PQMH10007Z	SPRING, FG	1
27	PQMC10009Z	ANGLE, FG (CABINET BODY)	1
28	PQGP10009Z1	PANEL, LED	1
29	PQGG10009Z1	GRILLE, LED	1
30	PQMH10026Z	FRAME, BELL TRANSFORMER	1
31	PQLT1U9M1A	BELL TRANSFORMER	1
32	PQMC10063Z	SHEET, CABINET BODY	1

Ref. No.	Part No.	Value, Part Name & Description	Pcs
		ACCESSORIES AND PACKING MATERIALS	
A1	PQJA10016Z	AC CORD	1
A2	PQJP1E1Z	PLUG	2
A3	PQJP1E2Z	PLUG	2
A4	PQHR10113Z1	COVER, TEL CORD	1
A5	PQHE10Z	MOUNTING BRACKET (CURL PLUG)	4
A6	PQHE5008Z	MOUNTING BRACKET (SCREW)	4
A7	PQQX10191Z	INSTRUCTION BOOK (ENGLISH)	1
A8	PQQX10192Z	INSTRUCTION BOOK (FRENCH)	1
A9	PQQX10193Z	PRINTED MATTER(TEMPLATE)	1
A10	XZB05X08A03	PROTECTION COVER (SCREW etc)	2
A11	XZB23X35A01	PROTECTION COVER (DOCUMENTS)	1
P1	PQPK10095Z	PACKING CASE	1
P2	PQPD10045Z	CUSHION, TOP	1
P3	PQPN10196Z	CUSHION, L/R	2
P4	PQPN10191Z	ACCESSORY BOX	1
		CPU BOARD PARTS	
PCB1	PQWP1TD1232C	CPU BOARD ASS'Y (RTL)	1
		(ICs)	
IC 1	PQVI68301FCG	IC	1
IC 2	PQVI620890F	IC	1
IC 3	PQVIMT8980DE	IC	1
IC 6~8	PQVIMC45503P	IC	3
IC10~12 ,14, 27	PQVINJM4558D	IC	5
IC13	PQVIPS520C	IC	1
IC15	PQVIHD75188P	IC S	1
IC16	PQVIHD75189P	IC S	1
IC17	PQVISN7H00S	IC S	1
IC18	PQVISN7L00S	IC	1
IC19	PQWI2TD1232C	IC (ROM)	1
IC20, 21	PQWI1D1232C1	IC (ROM PACK)	1
IC22, 23	PQVITC5183SD	IC S	2
IC24, 25	PQVIMB84256D	IC S	2
IC26	PQVIMS6242BS	IC	1
IC29	PQVISN7L368M	IC	1
IC31	PQVISN7L640M	IC	1
IC32	PQVISN7L365S	IC	1
IC33, 34	PQVISN7L368M	IC	2
IC35	PQVISN7L365S	IC	1
		(TRANSISTORS)	
Q 5	PQVTDTA144EK	TRANSISTOR(SI)	1
Q 6	2SC2412K	TRANSISTOR(SI)	1
Q 7	2SC2412K	TRANSISTOR(SI)	1
Q 8	PQVTDTA143E	TRANSISTOR(SI)	1
Q 9	PQVTDTC144E	TRANSISTOR(SI)	1
Q10	2SA933	TRANSISTOR(SI) (or 2SA1317)	1
Q11	2SC2412K	TRANSISTOR(SI)	1
Q12	2SC2878	TRANSISTOR(SI)	1
Q13	2SC2412K	TRANSISTOR(SI)	1
Q14	2SC2878	TRANSISTOR(SI)	1
		(DIODES)	
D1	MA4091	DIODE(SI)	1
D4	PQVDAK03	DIODE(SI)	2
D7~10	MA4068	DIODE(SI)	4
D11, 12	RLS71	DIODE(SI)	2
D13, 14	MA4030	DIODE(SI)	2
D15	MA4056	DIODE(SI)	1
D16, 17	RLS71	DIODE(SI)	2
D3, 20, D21	MA723	DIODE(SI)	3
		(RESISTORS)	
R 4	PQ4R10XJ471	470	1
R 5	PQ4R10XJ472	4.7K	1
R 6	PQ4R10XJ223	22K	1
R 7	PQ4R10XJ103	10K	1
R 8	PQ4R10XJ683	68K	1
R 9	PQ4R10XJ124	120K	1

This replacement parts list is for CANADA version only. Refer to the simplified manual (cover) for other areas.

Ref. No.	Part No.	Value	Pcs
R12	PQ4R10XJ393	39K	1
R13	PQ4R10XF1782	17.8K	1
R14	PQ4R10XJ104	100K	1
R15	PQ4R10XJ103	10K	1
R16	PQ4R10XJ274	270K	1
R17	PQ4R10XJ183	18K	1
R18	PQ4R10XJ103	10K	1
R19	PQ4R10XJ561	560	1
R20	PQ4R10XJ105	1M	1
R21	PQ4R10XJ563	56K	1
R22	PQ4R10XJ104	100K	1
R23	PQ4R10XJ104	100K	1
R24	PQ4R10XJ124	120K	1
R25	PQ4R10XJ823	82K	1
R26	PQ4R10XJ104	100K	1
R27	PQ4R10XJ104	100K	1
R28	PQ4R10XF1211	1.21K	1
R29	PQ4R10XF1211	1.21K	1
R30	PQ4R10XJ224	220K	1
R31	PQ4R10XF1401	1.4K	1
R32	PQ4R10XJ823	82K	1
R33	PQ4R10XJ472	4.7K	1
R34	PQ4R10XJ333	33K	1
R35	PQ4R10XJ104	100K	1
R36	PQ4R10XJ124	120K	1
R37	PQ4R10XJ104	100K	1
R38	PQ4R10XJ104	100K	1
R39	PQ4R10XJ124	120K	1
R40	PQ4R10XJ104	100K	1
R48	PQ4R10XJ333	33K	1
R50	PQ4R10XJ224	220K	1
R51	PQ4R10XJ333	33K	1
R52	PQ4R10XJ472	4.7K	1
R53	PQ4R10XJ104	100K	1
R57	PQ4R10XJ102	1K	1
R59	PQ4R10XJ104	100K	1
R61	PQ4R10XJ103	10K	1
R62	PQ4R10XJ223	22K	1
R65	PQ4R10XJ561	560	1
R66	PQ4R10XJ103	10K	1
R67	PQ4R10XJ103	10K	1
R68	PQ4R10XJ103	10K	1
R69	PQ4R10XJ103	10K	1
R70	PQ4R10XJ103	10K	1
R71	PQ4R10XJ103	10K	1
R72	PQ4R10XJ103	10K	1
R73	PQ4R10XJ103	10K	1
R74	PQ4R10XJ103	10K	1
R75	PQ4R10XJ103	10K	1
R76	PQ4R10XJ103	10K	1
R77	PQ4R10XJ103	10K	1
R78	PQ4R10XJ103	10K	1
R79	PQ4R10XJ103	10K	1
R83	ERDS1TJ151	150	1
R84	PQ4R10XJ152	1.5K	1
R85	PQ4R10XJ681	680	1
R87	PQ4R10XJ103	10K	1
R91	PQ4R10XJ103	10K	1
R92	PQ4R10XJ103	10K	1
R93	PQ4R10XJ103	10K	1
R94	PQ4R10XJ103	10K	1
R96	PQ4R10XJ103	10K	1
R97	PQ4R10XJ103	10K	1
R110	PQ4R10XJ470	47	1
R111	PQ4R10XJ470	47	1
R112	PQ4R10XJ470	47	1
R113	PQ4R10XJ103	10K	1
R114	PQ4R10XJ103	10K	1
R115	PQ4R10XJ222	2.2K	1
R116	PQ4R10XJ472	4.7K	1
R117	PQ4R10XJ103	10K	1
R118	PQ4R10XJ333	33K	1
R119	PQ4R10XJ103	10K	1
R120	PQ4R10XJ334	330K	1
R121	PQ4R10XJ222	2.2K	1
R122	PQ4R10XJ472	4.7K	1
R123	PQ4R10XJ103	10K	1
R124	PQ4R10XJ333	33K	1
R125	PQ4R10XJ103	10K	1
R126	PQ4R10XJ334	330K	1
R127	PQ4R10XJ472	4.7K	1
R128	PQ4R10XJ472	4.7K	1
R129	PQ4R10XJ470	47	1
R130	PQ4R10XJ470	47	1
R131	PQ4R10XJ470	47	1
R132	PQ4R10XJ470	47	1
R133	PQ4R10XJ470	47	1
R134	PQ4R10XJ390	39	1
R135	PQ4R10XJ470	47	1
R136	PQ4R10XJ470	47	1
R137	PQ4R10XJ470	47	1
R138	PQ4R10XJ101	100	1
R139	PQ4R10XJ101	100	1
R140	PQ4R10XJ101	100	1
R141	PQ4R10XJ101	100	1
R142	PQ4R10XJ101	100	1
R143	PQ4R10XJ101	100	1
R144	PQ4R10XJ101	100	1
R145	PQ4R10XJ101	100	1
R146	PQ4R10XJ470	47	1
R147	PQ4R10XJ470	47	1
R148	PQ4R10XJ470	47	1
R149	PQ4R10XJ470	47	1
R150	PQ4R10XJ470	47	1
R151	PQ4R10XJ470	47	1
R152	PQ4R10XJ470	47	1
R153	PQ4R10XJ470	47	1
R154	PQ4R10XJ470	47	1
R155	PQ4R10XJ470	47	1
R156	PQ4R10XJ470	47	1
R157	PQ4R10XJ470	47	1
R158	PQ4R10XJ470	47	1
R159	PQ4R10XJ470	47	1
R160	PQ4R10XJ470	47	1
R161	PQ4R10XJ390	39	1
R162	PQ4R10XJ390	39	1
R163	PQ4R10XJ560	56	1
R164	PQ4R10XJ560	56	1
R165	PQ4R10XJ560	56	1
R166	PQ4R10XJ560	56	1
R167	PQ4R10XJ560	56	1
R168	PQ4R10XJ560	56	1
R169	PQ4R10XJ560	56	1
R170	PQ4R10XJ560	56	1
R171	PQ4R10XJ560	56	1
R172	PQ4R10XJ560	56	1
R173	PQ4R10XJ560	56	1
R174	PQ4R10XJ560	56	1
R175	PQ4R10XJ560	56	1
R176	PQ4R10XJ560	56	1
R177	PQ4R10XJ560	56	1
R178	PQ4R10XJ560	56	1
R179	PQ4R10XJ560	56	1
R180	PQ4R10XJ560	56	1
R181	PQ4R10XJ560	56	1

This replacement parts list is for CANADA version only. Refer to the simplified manual (cover) for other areas.

Ref. No.	Part No.	Value	Pcs
R181	PQ4R10XJ560	56	1
R182	PQ4R10XJ560	56	1
R183	PQ4R10XJ560	56	1
R184	PQ4R10XJ560	56	1
R185	PQ4R10XJ560	56	1
R186	PQ4R10XJ560	56	1
R187	PQ4R10XJ560	56	1
R188	PQ4R10XJ560	56	1
R189	PQ4R10XJ560	56	1
R190	PQ4R10XJ560	56	1
R191	PQ4R10XJ560	56	1
R192	PQ4R10XJ560	56	1
R193	PQ4R10XJ560	56	1
R194	PQ4R10XJ560	56	1
R195	PQ4R10XJ560	56	1
R196	PQ4R10XJ560	56	1
R197	PQ4R10XJ560	56	1
R198	PQ4R10XJ560	56	1
R199	PQ4R10XJ560	56	1
R200	PQ4R10XJ560	56	1
R201	PQ4R10XJ102	1K	1
R202	PQ4R10XJ102	1K	1
R203	PQ4R10XJ102	1K	1
R204	PQ4R10XJ103	10K	1
R205	PQ4R10XJ103	10K	1
R206	PQ4R10XJ103	10K	1
R207	PQ4R10XJ103	10K	1
R208	PQ4R10XJ103	10K	1
R209	PQ4R10XJ103	10K	1
R210	PQ4R10XJ103	10K	1
R211	PQ4R10XJ103	10K	1
R212	PQ4R10XJ103	10K	1
R213	PQ4R10XJ103	10K	1
R214	PQ4R10XJ103	10K	1
R215	PQ4R10XJ103	10K	1
R216	PQ4R10XJ103	10K	1
R217	PQ4R10XJ103	10K	1
R218	PQ4R10XJ103	10K	1
R219	PQ4R10XJ103	10K	1
R220	PQ4R10XJ223	22K	1
R221	PQ4R10XJ222	2.2K	1
J 5	ERDS2TJ0T	0	1
J 6, 7	PQ4R10XJ000	0	2
		(CAPACITORS)	
C 1	EECFE5R5474	5.47M	1
C 2	ECEA1EU4R7	4.7	1
C 3	ECEA1HN3R3S	3.3	1
C 8	ECQV1H104JZ	0.1	1
C 9	ECQV1H104JZ	0.1	1
C11	PQCUV1H104ZF	0.1	1
C12	PQCUV1H101JC	100P	1
C13	PQCUV1H682KB	0.0068	1
C16	PQCUV1H101JC	100P	1
C17	PQCUV1H104ZF	0.1	1
C19	PQCUV1H101JC	100P	1
C20	PQCUV1H332KB	0.0033	1
C21	PQCUV1H104ZF	0.1	1
C22	PQCUV1H101JC	100P	1
C23	PQCUV1H101JC	100P	1
C24	PQCUV1H332KB	0.0033	1
C25	PQCUV1H104ZF	0.1	1
C26	PQCUV1H104ZF	0.1	1
C27	PQCUV1H102J	0.001	1
C28	PQCUV1H104ZF	0.1	1
C29	PQCUV1H101JC	100P	1
C30	PQCUV1H104ZF	0.1	1
C31	PQCUV1H102J	0.001	1

Ref. No.	Part No.	Value, Part Name & Description		Pcs
C33	PQCUV1H223KB	0.022		1
C34	PQCUV1H223KB	0.022		1
C35	PQCUV1H223KB	0.022		1
C36	PQCUV1H223KB	0.022		1
C37	PQCUV1H223KB	0.022		1
C38	PQCUV1H223KB	0.022		1
C39	PQCUV1H200JC	20P		1
C40	PQCUV1H223KB	0.022		1
C41	PQCUV1H223KB	0.022		1
C42	PQCUV1H223KB	0.022		1
C43	PQCUV1H223KB	0.022		1
C44	PQCUV1H223KB	0.022		1
C45	PQCUV1H223KB	0.022		1
C46	PQCUV1H223KB	0.022		1
C47	PQCUV1H223KB	0.022		1
C50	ECEA1EU331	330		1
C53	PQCUV1H180JC	18P		1
C54	PQCUV1H180JC	18P		1
C55	PQCUV1H223KB	0.022		1
C56	PQCUV1H223KB	0.022		1
C59	ECEA1HU010	1		1
C60	ECEA1HU010	1		1
C61	ECEA1HU010	1		1
C62	ECEA1HU010	1		1
C63	ECEA1HU010	1		1
C64	PQCUV1H223KB	0.022		1
C66	ECEA1AU101	100		1
C67	PQCUV1H223KB	0.022		1
C68	PQCUV1H223KB	0.022		1
C70	PQCUV1H223KB	0.022		1
C71	PQCUV1H223KB	0.022		1
C72	PQCUV1H223KB	0.022		1
C80	PQCUV1H200JC	20P		1
C81	PQCUV1H223KB	0.022		1
C82	PQCUV1H223KB	0.022		1
C83	PQCUV1H223KB	0.022		1
C84	PQCUV1H223KB	0.022		1
C85	PQCUV1H223KB	0.022		1
C86	PQCUV1H104ZF	0.1		1
C87	ECEA1VU330	33	S	1
C88	ECEA1HN2R2S	2.2		1
C89	PQCUV1H104ZF	0.1		1
C90	ECEA1VU330	33	S	1
C91	ECEA1HN2R2S	2.2		1
C92	PQCUV1H101JC	100P		1
C93	PQCUV1H101JC	100P		1
C94	PQCUV1H470JC	47P		1
C95	PQCUV1H470JC	47P		1
C96	PQCUV1H470JC	47P		1
C97	PQCUV1H223KB	0.022		1
C98	PQCUV1H223KB	0.022		1
C99	PQCUV1H223KB	0.022		1
		(TRANSFORMERS)		
T1	ETA14Y180AY	TRANSFORMER		1
T2~5	PQLT2D6A	TRANSFORMER	S	4
		(COILS)		
L7~14	PQLE106	COIL		8
L21~23	PQVFTU50MT	CERAMIC FILTER		3
L24~27	PQVFCM04RC01	CERAMIC FILTER		4
		(JACKS)		
JAC1, 2	PQJJ1G1Z	JACK, PAGING		2
JAC3, 4	PQJJ1D3Z	JACK, EP		2
		(CONNECTORS)		1
CN1	PQJS64R15Z	CONNECTOR, 64P		1
CN4	PQJP2D70Z	CONNECTOR, 2P		1

This replacement parts list is for CANADA version only. Refer to the simplified manual (cover) for other areas.

Ref. No.	Part No.	Part Name & Description		Pcs
CN9	PQJP20A08Z	CONNECTOR, 20P		1
CN12	PQJP6D70Z	CONNECTOR, 6P		
		(BATTERY)		1
BAT	CR2354-1HF	LITHIUM BATTERY		1
		(SWITCHES)		
SW1	EVQ21409K	SWITCH		1
SW2	PQSS2A24Z	SWITCH		1
SW3	ESD11V120	SWITCH		1
		(CRYSTAL OSCILLATORS)		
X1	PQVCJ8192N8Z	CRYSTAL OSCILLATOR		1
X2	PQVCL3276N6Z	CRYSTAL OSCILLATOR		1
		(COMPONENTS COMBINATIONS)		
Z1, 2, 4~6	PQRSLD8X103J	RESISTOR ARRAY		5
		EXTENSION BOARD PARTS		
PCB2	PQWP2TD1232C	EXTENSION BOARD ASS'Y (RTL)		1
		(ICs)		
IC201A~ IC201H	PQVIMC45503W	IC		8
IC202A~ IC202H	PQVINJM4558M	IC		8
IC203A~ IC203H	PQVINJM319VT	IC		8
IC211	PQVI603830F	IC		1
IC213	PQVIMT8952BE	IC		1
IC215	PQVICM8870FI	IC	S	1
IC216	PQVICM8870FI	IC	S	1
IC217	PQVIMC4051BF	IC	S	1
IC218	PQVIMC4051BF	IC	S	1
IC219	PQVISN7L14S	IC	S	1
IC220	PQVISN7L14S	IC	S	1
IC221	PQVISN7L14S	IC	S	1
IC222	PQVISN7L365S	IC		1
IC223	PQVISN7L86S	IC	S	1
IC224	PQVISN7L640M	IC		1
		(TRANSISTORS)		
Q200A~ Q200D	2SB1218A	TRANSISTOR(SI) (or 2SA1576R)	S	8
Q200E~ Q200H	2SD1819A	TRANSISTOR(SI) (or 2SA4081R)	S	4
Q201A~ Q201D, Q201F~ Q201H	2SA1576	TRANSISTOR(SI)	S	7
Q201E	2SB1218A	TRANSISTOR(SI) (or 2SA1576R)	S	1
Q203A~ Q203H	2SB1322	TRANSISTOR(SI)		8
Q204A~ Q204H	2SD1994A	TRANSISTOR(SI)		8
Q205A~ Q205H	2SD1819A	TRANSISTOR(SI) (or 2SC4081R)	S	8
Q206A~ Q206H	2SD1819A	TRANSISTOR(SI) (or 2SC4081R)	S	8
Q207A~ Q207H	PQVTDTC143E	TRANSISTOR(SI)		8
Q208A~ Q208H	2SB1218A	TRANSISTOR(SI) (or 2SA1576R)	S	8
Q210	2SD2137	TRANSISTOR(SI)		1
Q211	UN5113	TRANSISTOR(SI)	S	1
Q213	2SD1819A	TRANSISTOR(SI) (or 2SC4081R)	S	1
Q214	UN5213	TRANSISTOR(SI)	S	1
Q215	2SD2137	TRANSISTOR(SI)		1
Q220A	UN5213	TRANSISTOR(SI)	S	1
Q221	PQVTDTC143E	TRANSISTOR(SI)		1
Q251	2SB1322	TRANSISTOR(SI) (or 2SB1237R)	S	1
Q252	UN5113	TRANSISTOR(SI)	S	1

Ref. No.	Part No.	Value, Part Name & Description		Pcs
		(DIODES)		
D203A	RLS71	DIODE(SI)		1
D204A~ D204H	RLS71	DIODE(SI)		8
D205A~ D205H	RLS71	DIODE(SI)		8
D206A~ D206H	RLS71	DIODE(SI)		8
D207A~ D207H	RLS71	DIODE(SI)		8
D210A~ D210H	RLS71	DIODE(SI)		8
D211A~ D211H	MA4039	DIODE(SI)		8
D212A D212H	MA151WK	DIODE(SI) (or 1SS184)	S	8
D213A~ D213H	1SS181	DIODE(SI)		8
D214A~ D214H	RLS71	DIODE(SI)		8
D220	RLS71	DIODE(SI)		1
D221	RLS71	DIODE(SI)		1
D223	RLS71	DIODE(SI)		1
D225	RLS71	DIODE(SI)		1
D251	MA4056	DIODE(SI)		1
D252	RLS71	DIODE(SI)		1
		(RESISTORS)		
R200A~ R200H	PQ4R10XJ330	33		8
R201A~ R201H	PQ4R10XJ222	2.2K		8
R202A~ R202H	PQ4R10XJ222	2.2K		8
R203	PQ4R10XJ101	100		1
R204	PQ4R10XJ105	1M		1
R205A~ R205H	ERDS2TJ220	22		8
R206A~ R206H	ERDS2TJ680	68		8
R207A~ R207H	PQ4R10XJ682	6.8K		8
R208A~ R208H	ERDS2TJ220	22		8
R209A~ R209H	ERDS2TJ680	68		8
R210A R210H	PQ4R10XJ682	6.8K		8
R211A ~ R211H	PQ4R10XF3000	300		8
R212A~ R212H	PQ4R10XF2940	294		8
R213A~ R213H	PQ4R10XF3000	300		8
R214A~ R214H	PQ4R10XF7502	75K		8
R215A~ R215H	PQ4R10XF1003	100K		8
R216A~ R216H	PQ4R10XF4702	47K		8
R217A~ R217H	PQ4R10XF4702	47K		8
R218A~ R218H	PQ4R10XF1003	100K		8
R219A~ R219H	PQ4R10XF1003	100K		8
R220A~ R220H	PQ4R10XF1003	100K		8
R221A~ R221H	PQ4R10XF1003	100K		8
R222A~ R222H	PQ4R10XF3000	300		8

This replacement parts list is for CANADA version only. Refer to the simplified manual (cover) for other areas.

Ref. No.	Part No.	Value	Pcs
R223A~ R223H	PQ4R10XF7502	75K	8
R224A~ R224H	PQ4R10XJ153	15K	8
R225A~ R225H	PQ4R10XJ333	33K	8
R226A~ R226H	PQ4R10XJ103	10K	8
R227A~ R227H	PQ4R10XJ473	47K	8
R228A~ R228H	PQ4R10XJ123	12K	8
R229A~ R229H	PQ4R10XJ333	33K	8
R230A~ R230H	PQ4R10XJ103	10K	8
R231A~ R231H	PQ4R10XJ102	1K	8
R232A~ R232H	PQRD2TJ102	1K	8
R233A~ R233H	PQ4R10XJ1R8	1.8	8
R234A~ R234H	PQ4R10XJ472	4.7K	8
R235A~ R235H	PQ4R10XJ472	4.7K	8
R236A~ R236H	PQ4R10XJ472	4.7K	8
R237A~	PQ4R10XJ472	4.7K	8
R237A~	PQ4R10XJ472	4.7K	8
R238A~ R238H	PQ4R10XJ330	33	8
R239A~ R239H	PQ4R10XJ222	2.2K	8
R240A~ R240H	PQ4R10XJ222	2.2K	8
R241	PQ4R10XJ473	47K	1
R242	PQ4R10XJ682	6.8K	1
R243	PQ4R10XJ223	22K	1
R244	PQ4R10XJ472	4.7K	1
R245	PQ4R10XJ153	15K	1
R246	PQ4R10XJ152	1.5K	1
R247	PQ4R10XJ223	22K	1
R248A~ R248H	PQ4R10XJ471	470	8
R251	PQ4R10XJ103	10K	1
R252	PQ4R10XJ103	10K	1
R253	PQ4R10XJ103	10K	1
R254	PQ4R10XJ103	10K	1
R255	PQ4R10XJ393	39K	1
R256	PQ4R10XJ104	100K	1
R257	PQ4R10XJ334	330K	1
R258	PQ4R10XJ393	39K	1
R259	PQ4R10XJ104	100K	1
R260	PQ4R10XJ334	330K	1
R261	PQRD1TJ820	82 S	1
R262	PQ4R10XJ152	1.5K	1
R263	PQ4R10XJ152	1.5K	1
R264	PQ4R10XJ152	1.5K	1
R265	PQ4R10XJ103	10K	1
R266	PQ4R10XJ103	10K	1
R267	PQ4R10XJ101	100	1
R268	PQ4R10XJ101	100	1
R269	PQ4R10XJ101	100	1
R270	ERDS2TJ220	22	1
R270A-H	PQ4R10XJ103	10K	8
R271	PQ4R10XJ682	6.8K	1
R272	PQ4R10XJ101	100	1
R273	PQ4R10XJ103	100K	1

Ref. No.	Part No.	Value	Pcs
R274	Not Used		
R275A~ R275H	PQ4R10XJ563	56K	8
R276A~ R276H	PQ4R10XJ560	56	8
R277A~ R277H	PQ4R10XJ560	56	8
R278A~ R278H	PQ4R10XJ560	56	8
R279A~ R279H	PQ4R10XJ560	56	8
R280	PQ4R10XJ223	22K	1
R285	PQ4R10XJ122	1.2K	1
R286	PQ4R10XJ152	1.5K	1
R290A~ R290H	PQ4R10XJ472	4.7K	8
R291A~ R291H	PQ4R10XJ472	4.7K	8
R292A~ R292H	PQ4R10XJ472	4.7K	8
R293	PQ4R10XF6801	6.8K	1
R294	PQ4R10XF1201	1.2K	1
R295A~ R295H	PQ4R10XJ101	100	8
R296A~ R296H	PQ4R10XJ220	22	8
R297A~ R297H	PQ4R10XJ220	22	8
R299A~ R299H	PQ4R10XJ101	100	8
J201~ J204	PQ4R10XJ000	0	8
J251A ~ J251H	PQ4R10XJ000	0	8
J253A~ J253H	PQ4R10XJ000	0	8
J255A~ J255H	PQ4R10XJ000	0	8
J257A~ J257H	PQ4R10XJ000	0	8
J259A ~ J259H	PQ4R10XJ000	0	8
		(CAPACITORS)	
C200A~ C200H	ECEA1HKS2R2	2.2	8
C202A~ C202H	ECEA1HKS2R2	2.2	8
C204A~ C204H	ECEA1HU100	10	8
C205A~ C205H	ECEA1EN100S	10	8
C206A~ C206H	ECEA1EN100S	10	8
C207A~ C207H	ECEA1HKS3R3	3.3	8
C208A~ C208H	ECUV1H104MD	0.1 S	8
C209A~ C209H	PQCUV1H104ZF	0.1	8
C210A~ C210H	PQCUV1H104ZF	0.1	8
C211A~ C211H	ECEA1HN4R7S	4.7	8
C212A~ C212H	PQCUV1H104ZF	0.1	8
C213A ~ C213H	PQCUV1H104ZF	0.1	8
C214	Not Used		
C215	Not Used		

This replacement parts list is for CANADA version only. Refer to the simplified manual (cover) for other areas.

Ref. No.	Part No.	Value, Part Name & Description		Pcs
C216A ~ C216H	ECEA1HKS2R2	2.2		8
C217A ~ C217H	PQCUV1H680JC	68P		1
C218A~ C218H	PQCUV1H680JC	68P		8
C219A~ C219H	ECUV1H104MD	0.1		8
C220	ECEA1EU101	100		1
C220A~ C220H	ECUV1H393KB	0.039		8
C221	ECEA1EU101	100		1
C222A~ C222H	ECEA1HU100	10		8
C251~ C254	PQCUV1H223KB	0.022		4
C255	ECEA1VU330	33	S	1
C256	PQCUV1H221JC	220P		1
C257~ C259	PQCUV1H104ZF	0.1		3
C260	ECEA1ESS471U	470		
C262~ C264	ECEA1VU330	33	S	1 3
C265	PQCUV1H104ZF	0.1		1
C270	ECEA1AU101	100		1
C272	PQCUV1H104ZF	0.1		1
C273	PQCUV1H104ZF	0.1		1
C280	PQCUV1H104ZF	0.1		1
C281	PQCUV1H104ZF	0.1		1
C282	PQCUV1H104ZF	0.1		1
C283	PQCUV1H104ZF	0.1		1
C284	PQCUV1H104ZF	0.1		1
C285	PQCUV1H104ZF	0.1		1
C287	PQCUV1H104ZF	0.1		1
C288	PQCUV1H104ZF	0.1		1
C289	PQCUV1H104ZF	0.1		1
C290	PQCUV1H104ZF	0.1		1
C292	ECEA1EU101	100		1
C295, 296	PQCUV1H104ZF	0.1		2
		(CONNECTORS)		
CN200	PQJS50A04Z	CONNECTOR ,50P		1
CN201	PQJS50R15Z	CONNECTOR ,50P		1
		(CHOKE COILS)		
L200A~ L200H	PQLQZM100K	CHOKE COIL	S	8
L201A ~ L201H	PQLQZM100K	CHOKE COIL	S	8
L202A~ L202H	PQLE106	CHOKE COIL		8
L203A~ L203H	PQLE106	CHOKE COIL		8
		(RELAYS)		
RY200A, RY200B	PQSL44Z	RELAY		2
RY201A, RY202A~ RY202H	PQSL119Z	RELAY		9
		(TRANSFORMERS)		
T201A~ T201H	ETE13K79AY	TRANSFORMER		8
		(FUSES)		
F200, 201	PQBA1N15NMAL	FUSE		2

Ref. No.	Part No.	Value, Part Name & Description		Pcs
		(VARISTORS)		
ZR202A~ ZR202H	PQVDNV039D03	VARISTOR		8
ZR203A~ ZR203H	PQVDNV039D03	VARISTOR		8
ZR204A~ ZR204H	PQVDNV039D03	VARISTOR		8
ZR205A~ ZR205H	PQVDNV039D03	VARISTOR		8
		(CERAMIC RESONATOR)		
X201	PQVBFC3584A1	CERAMIC RESONATOR		1
		CO LINE BOARD PARTS		
PCB3	PQWP3TD1232C	CO LINE BOARD ASS'Y (RTL)		1
		(ICs)		
IC101A~ IC101H	PQVINJM4558M	IC		8
IC102A~ IC102H	PQVIMC45503W	IC		8
IC111	PQVI63HB110	IC	S	1
IC112	PQVISN7L138M	IC		1
IC114	PQVISN7L138M	IC		1
IC116	PQVISN7L640M	IC		1
IC117	PQVISN7L08S	IC	S	1
IC120	PQVISN7L04S	IC	S	1
IC121	PQVISN7L14S	IC	S	1
IC122	PQVISN7L273M	IC		1
IC123	PQVISN7L14S	IC	S	1
		(TRANSISTORS)		
Q101A ~ Q101H	2SD1897	TRANSISTOR(SI)		8
Q102A~ Q102H	PQVTDTC143EK	TRANSISTOR(SI)		8
Q111	2SB1322	TRANSISTOR(SI) (or 2SB1237R)	S	1
Q112	UN5113	TRANSISTOR(SI)	S	1
Q120A~ Q120H	2SA1627	TRANSISTOR(SI)		8
		(DIODES)		
D101A~ D101H	PQVDS1YB40F1	DIODE(SI)		8
D102A~ D102H	PQVDHZS2B1	DIODE(SI)		8
D103A~ D103H	PQVDHZS2B1	DIODE(SI)		8
D104A~ D104H	MA3047	DIODE(SI)		8
D105A~ D105H	MA3047	DIODE(SI)		8
D108A~ D108H	RLS71	DIODE(SI)		8
D154	MA4056	DIODE(SI)		1
D155	MA723	DIODE(SI)		1
		(RESISTORS)		
R101A~ R101H	ERQN1VJ223	22K		8
R102A ~ R102H	PQ4R10XJ822	8.2K		8
R103A~ R103H	ERDS2TJ390	39		8
R104A~ R104H	PQ4R10XJ103	10K		8
R105A~ R105H	PQ4R10XJ471	470		8
R107A~ R107H	PQ4R10XF1211	1.21K		8
R108A~ R108H	PQ4R10XF1001	1K		8
R110A~ R110H	PQ4R10XF2323	232K		8

This replacement parts list is for CANADA version only. Refer to the simplified manual (cover) for other areas.

Ref. No.	Part No.	Value, Part Name & Description	Pcs
R111A~ R111H	PQ4R10XF1003	100K	8
R112A~ R112H	PQ4R10XF1003	100K	8
R113A~ R113H	PQ4R10XF1003	100K	8
R114A~ R114H	PQ4R10XF4702	47K	8
R115A~ R115H	PQ4R10XF1203	120K	8
R116A~ R116H	PQ4R10XF4702	47K	8
R118A~ R118H	ERDS2TJ122	1.2K	8
R119A~ R119H	PQ4R10XF1211	1.21K	8
R122A~ R122H	PQ4R10XJ222	2.2K	8
R125 ~ R132	PQ4R10XJ101	100	8 1
R153	PQ4R10XJ152	1.5K	1
R154	PQRD1VJ221	220	1
R155~ R160	PQ4R10XJ103	10K	8
R161	PQ4R10XJ101	100	1
R161A~ R161H	ERDS2TJ560	56	8
R162A~ R162H	PQ4R10XJ104	100K	8
R163A ~ R163H	PQRQ25VJ5R6	5.6	8
R164A~ R164H	ERDS2TJ272	2.7K	8
R165A~ R165H	ERJ6ENF5360	536	8
J151~ J154	PQ4R10XJ000	0	4
J155A~ J155H	PQ4R10XJ000	0	8
J156A~ J156H	PQ4R10XJ000	0	8
		(CAPACITORS)	
C101A ~ C101H	ECKDKC222KB	0.0022	8
C102A~ C102H	ECQE2474KF	0.47	8
C103A~ C103H	ECEA1HU100	10	8
C104A~ C104H	ECEA1HU220	22	8
C105A~ C105H	PQCUV1H102J	0.001	8
C106A~ C106H	PQCUV1H473MD	0.047	8
C107A~ C107H	PQCUV1H820JC	82P	8
C108A~ C108H	ECUV1H104MD	0.1	8
C109A C109H	PQCUV1H223KB	0.022	8
C110A~ C110H	PQCUV1H223KB	0.022	8
C111A~ C111H	ECEA1HKSR47	0.47	8
C120	PQCUV1H101JC	100	1
C151	ECEA1HU330	33	1
C152	ECEA1HU330	33	1
C153	ECEA1HU330	33	1
C154	ECEA1HKS010	1	1
C155	ECEA1ESS331	330	1
C156	ECEA0JU222	2200	1

Ref. No.	Part No.	Value, Part Name & Description		Pcs
		(CONNECTORS)		
CN101	PQJS50R15Z	CONNECTOR, 50P		1
CN104	PQJS22A15Z	CONNECTOR, 22P		1
CN105	PQJS08A15Z	CONNECTOR, 8P		
CN106	PQJS22A15Z	CONNECTOR, 22P		1
CN107	PQJS08A15Z	CONNECTOR, 8P		1
CN108~ CN111	PQJJ1TB25Y	JACK, TEL		4
		(COILS)		
L101A~ L101H	PQLE106	COIL		8
L102A~ L102H	PQLE106	COIL		8
L103A~ L103H	PQLE106	COIL		8
L104A~ L104H	PQLE106	COIL		8
		(PHOTO ELECTRIC TRANSDUCERS)		
PC101A~ PC101H	ON3181R	PHOTO ELECTRIC TRANSDUCER		8
PC102A~ PC102H	PQVITLP627	PHOTO ELECTRIC TRANSDUCER		8
		(RELAYS)		
RY101A~ RY101H	PQSL41Z	RELAY		8
		(VARISTORS)		
SA101A~ SA101H	PQVDRA311PT2	VARISTOR (SURGE ABSORBER)		8
SA102A~ SA102H	PQVDRA311PT2	VARISTOR (SURGE ABSORBER)		8
SA103A~ SA103H	PQVDDSV301Y	VARISTOR (SURGE ABSORBER)		8
SA104	PQVDDSV301Y	VARISTOR (SURGE ABSORBER)		1
ZR101A~ ZR101H	ERZC07DK820	VARISTOR	S	8
		(TRANSFORMERS)		
T101A~ T101H	ETA14Y85AY	TRANSFORMER	S	8

SMDR / LED BOARD PARTS

PCB4	PQWP4TD1232C	SMDR / LED BOARD ASS'Y (RTL)		1
		(DIODE)		
LED	LN242RP	DIODE(SI)	S	
		(TRANSISTORS)		
R700	ERDS2TJ821	820		1
R701	ERDS2TJ821	820		1
R702	ERDS2TJ821	820		1
R703	ERDS2TJ821	820		1
		(CAPACITORS)		
C700	ECKD1H392MD	0.0039	S	1
C701	ECKD1H392MD	0.0039	S	1
C702	ECKD1H392MD	0.0039	S	1
C703	ECKD1H392MD	0.0039	S	1
		(CONNECTORS)		
CN701	PQJS06R49Z	CONNECTOR, 6P		1
CN702	PQJS25P31Z	SOCKET, 25P		1
CN703	PQJS02R48Z	CONNECTOR, 2P		1

MOTHER BOARD PARTS

PCB5	PQWP5TD1232C	MOTHER BOARD ASS'Y (RTL)		1
		(COMPONENTS COMBINATIONS)		
RA401	PQRS8B8332J	RESISTOR ARRAY		1
RA402	EXBP88472K	RESISTOR ARRAY	S	1

This replacement parts list is for CANADA version only. Refer to the simplified manual (cover) for other areas.

Ref. No.	Part No.	Value, Part Name & Description	Pcs
		(CONNECTORS)	
CN402	PQJP64A09Z	CONNECTOR, 64P	1
CN403	PQJP50A09Z	CONNECTOR, 50P	1
CN404	PQJP50A09Z	CONNECTOR, 50P	1
CN405	PQJP50A09Z	CONNECTOR, 50P	1
CN406	PQJP60A09Z	CONNECTOR, 60P	1
CN407	PQJP60A09Z	CONNECTOR, 60P	1
CN408	PQJP60A09Z	CONNECTOR, 60P	1
CN409	PQJP50A09Z	CONNECTOR, 50P	1
CN410	PQJP34A09Z	CONNECTOR, 34P	1
CN411	PQJP40A09Z	CONNECTOR, 40P	1
		POWER SUPPLY UNIT PARTS	
		(CHASSIS & ELECTRICAL PARTS)	
90	PQQT4164Z	CAUTION LABEL	1
91	PQMC10053Z	SHIELD COVER ⚠	1
92	PQMC10052Z	SHIELD CASE ⚠	1
93	PQHR447Z	SPACER-A	1
94	PQHR10178Z	SPACER-B	1
95	PQHR10179Z	SPACER-C	1
96	PQJS02R46Z	CONNECTOR, 2P ⚠	1
97	PQJP04R07Z	CONNECTOR, 4P	1
98	PQJP3A3Z	SOCET, AC ⚠	1
99	EST15304T	SWITCH, POWER ⚠	1
100	PQMH10027Z	ANGLE, POWER SW ⚠	1
101	PQJV3Z	HOLDER, FUSE ⚠	1
102	XBA2C25ND1L	FUSE ⚠	1
103	PQQT10469Z	FUSE LABEL ⚠	1
PCB6	PQWP6TD1232C	POWER SUPPLY BOARD ASS'Y (RTL) ⚠	1
		(ICs)	
IC400	PQVISTK73904	IC	1
IC450	PQVISTK732C	IC	1
IC451	PQVIHLD05003	IC	1
IC452	PQVILA6500	IC	1
		(TRANSISTOR)	
Q450	2SC4641	TRANSISTOR(SI)	1
		(DIODES)	
D400	PQVDD5SB40	DIODE (SI) ⚠	1
D401	PQVDERD3805L	DIODE (SI) ⚠	1
D402	PQVDRD13FB	DIODE(SI)	1
D450	PQVDRD6.2FB	DIODE (SI)	1
D451	PQVDC25P30F	DIODE (SI)	1
D452	PQVDC25P30F	DIODE (SI)	1
D453	MA4057M	DIODE(SI) ⚠	1
D454	PQVDD10SC4M	DIODE (SI)	1
D455	PQVDD10SC4M	DIODE (SI)	1
		(RESISTORS)	
R401	ERS1TJ474	470K	1
R402	ERDS1TJ104	100K	1
R403	ERG2SJ223	22K	1
R404	ER016CKF1801	1.8K	1
R405	ERF5TKR22M	0.22	1
R406	ER016CKF4700	470	1
R407	ER016CKF5110	511	1
R408	ERG3SJ101	100	
R409	ERDS1TJ104	100K	1
R450	ERDS2TJ222	2.2K	1
R451	ERDS2TJ122	1.2K	1
R453	ERDS2TJ562	5.6K	1
R454	ERDS2TJ472	4.7K	1
R455	ERG3SJ271	270	1
R456	ERDS2TJ100	10	1
R457	ERF5TLK75M	700K	1
R458	ERDS2TJ272	2.7K	1
R459	ERDS2TJ392	3.9K	1

Ref. No.	Part No.	Value, Part Name & Description	Pcs
R460	PQRF2TLK50M	5	1
R462	ERDS2TJ562	5.6K	
R463	ERDS2TJ472	4.7K	1
R464	ERDS2TJ2R2	2.2	1
R465	ERG2SJ101	100	1
R466	ERDS2TJ390	39	1
R467	ERDS2TJ102	1K	1
R469	ER016CKF2561	256	1
R470	ER016CKF2701	2.7K	1
R471	ER016CKF1522	15.2K	1
		(CAPACITORS)	
C400	ECQU2A684MX	0.68 ⚠	1
C401	ECKDKC472KB	0.0047 ⚠	1
C402	ECKDKC472KB	0.0047 ⚠	1
C403	ECKDKC472KB	0.0047 ⚠	1
C404	ECKDKC332KB	0.0033 ⚠S	1
C405	ECKWRS472ME	0.0047 ⚠	1
C406	ECKWRS472ME	0.0047 ⚠	1
C407	ECKDKC332KB	0.0033 ⚠S	1
C408	EC0S2DB681BA	680P ⚠	1
C409	EC0S2DB681BA	680P ⚠	1
C410	ECKW3A151KB	150P	1
C411	ECQE6224RJ	0.22 ⚠	1
C412	ECQE10472KF	0.0047 ⚠	1
C414	ECQB1H222JF	0.0022	1
C415	ECQB1H392JF	0.0039	1
C416	ECKZ3A101KB	100P	1
C417	ECQE1H683JZ	0.068	1
C450	ECEA1VFG332	3300	1
C452	ECQB1H102JZ	0.001 S	1
C454	ECEA1JFG102	1000	1
C455	ECEA1JFG102	1000	1
C456	ECEA1VFG331	330	1
C457	ECEA1HGE010	1	1
C458	ECEA1JFG102	1000	1
C459	ECQB1H102JZ	0.001 S	1
C460	ECEA1EFG102	1000	1
C461	ECEA1HGA0R1	0.1	1
C462	ECEA1CFG102	0.001	1
C463	ECQV1H104JZ	0.1	1
C464	ECEA1HGE100	10	1
C465	ECQV1H104JZ	0.1	1
C467	ECEA1EGE101	100	1
C468	ECEA1VFG101	100	1
		(VARISTOR)	
SA400	ERZC14DK271U	VARISTOR ⚠	1
		(VARIABLE RESISTORS)	
VR450	EVMF5S00B23	SEMI-FIXED RESISTOR, 2KΩ (B)	1
VR451	EVMF5S00B23	SEMI-FIXED RESISTOR, 2KΩ (B)	1
CN400	PQJP2D98Z	CONNECTOR, 2P	1
CN401	PQJS07R50Z	CONNECTOR, 7P	1
CN402	PQJP4D30Z	CONNECTOR, 4P	1
CN403	PQJP4D46Z	CONNECTOR, 4P	1
		(COMPONENT COMBINATION)	
CR400	PQVDMGC4R3R2	COMPONENT COMBINATION ⚠	1
CR401	PQVDMGC4R3R2	COMPONENT COMBINATION ⚠	1
		(THYRISTOR)	
SCR450	PQVDTCSF5B41	THYRISTOR	1
		(COILS)	
L401	ELF18D450M	COIL ⚠	1
L400	ELF18D480C	COIL ⚠	1
L455	PQLE127	COIL	1
L450	PQLE128	COIL	1
L451	PQLE129	COIL	1

This replacement parts list is for CANADA version only. Refer to the simplified manual (cover) for other areas.

Ref. No.	Part No.	Part Name & Description	Pcs
L452	PQLE72	COIL	1
L453	PQLE94	COIL	1
L454	PQLE94	COIL	1
		(TRANSFORMER)	
T400	ETS42AC111AC	TRANSFORMER ⚠	1
		(PHOTO ELECTRIC TRANSDUCER)	
PC400	PQVIPC817CD	PHOTO COUPLER ⚠	1
		(THERMISTOR)	
TH401	PQRTD0WFL5R0	THERMISTOR ⚠	1
		(FUSE)	
F450	XBA1C40N1001	FUSE ⚠	1
		FIXTURES AND TOOL	
EC1	PQZZ64K2Z	EXTENSION CORD, 64P	1
EC2	PQZZ60K1Z	EXTENSION CORD, 60P	1
EC3	PQZZ50K2Z	EXTENSION CORD, 50P	1
EC4	PQZZ40K1Z	EXTENSION CORD, 40P	1
EC5	PQZZ34K1Z	EXTENSION CORD, 34P	1
		Notes: Extension cords are useful for servicing. (They make servicing easy.)	

T Ⓕ KXTD 1232C
Printed in Japan

ORDER NO. KM49309622A3

Service Manual

and Technical Guide

DIGITAL SUPER HYBRID SYSTEM

KX-TD1232BX

• Please use this manual together with the original Service Manual for KX-TD1232C, Order No. KM49307582C1.
This Service Manual indicates tha main differences between; Original KX-TD1232C and KX-TD1232BX.

■ SPECIFICATIONS (Change of original page 4)

General Description

4. Power Supplies

Primary	120 V AC, 60 Hz	→	Primary	220-240 V AC, 50/60 Hz

Characteristics

5. Primary Power

120V AC, 60 Hz	→	220-240 V AC, 50/60Hz
(Model: KX-TD1232C)		(Model: KX-TD1232BX)

■ INSULATION RESISTANCE TEST (Change of original page 3)

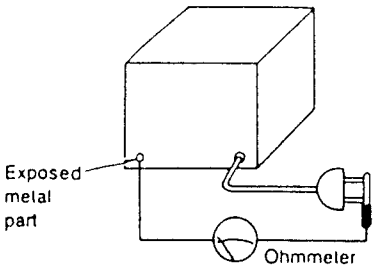

Fig. 2

Resistance=Approx. 5 MΩ ← **Change**
(at DC 500 V)

(KX-TD1232BX)

Panasonic

This replacement parts list is for KX-TD1232BX version only. Refer to the simplified manual (cover) for other areas.

REPLACEMENT PARTS LIST

Model KX-TD1232BX

Notes:

1. The marking (RTL) indicates that the Retention Time is limited for this item. After the discontinuation of this assembly in production, the item will continue to be available for a specific period of time. The retention period of availability is dependant on the type of assembly, and in accordance with the laws governing part and product retention. After the end of this period, the assembly will no longer be available.
2. Important safety notice.
   Components identified by the ⚠ mark special characteristics important for safety.
   When replacing any of these components, use only manufacturer's specified parts.
3. The S mark indicates service standard parts and may differ from production parts.
4. RESISTORS & CAPACITORS
   Unless otherwise specified.
   All resistors are in ohms (Ω) K=1000Ω, M=1000KΩ
   All capacitors are in MICRO FARADS(μF) P= μμF
   *Type &Wattage of Resistor
   Type

ERC: Solid	ERX: Metal Film	PQRD: Carbon
ERD: Carbon	ERG: Metal Oxide	PQRQ: Fuse
PQ4R: Chip	ERO: Metal Film	ERF: Wire Wound

   Wattage

10, 16, 18: 1/8W	14, 25, S2: 1/4W	12, 50, S1: 1/2W	1: 1W	2: 2W	5: 5W

   *Type & Voltage of Capacitor
   Type

ECFD: Semi-Conductor	ECCD, ECKD, PQCBC, PQVP: Ceramic
ECQS: Styrol	ECQM, ECQV, ECQE, ECQU, ECQB: Polyester
PQCBX, ECUV: Chip	ECEA, ECSZ, ECOS: Electrolytic
ECMS: Mica	ECQP: Polypropylene

   Voltage

ECQ Type	ECQG ECQV Type	ECSZ Type	Others	
1H: 50V	05: 50V	OF: 3.15V	OJ: 6.3V	1V: 35V
2A: 100V	1: 100V	1A: 10V	1A: 10V	50, 1H: 50V
2E: 250V	2: 200V	1V: 35V	1C: 16V	1J: 63V
2H: 500V		OJ: 6.3V	1E, 25: 25V	2A: 100V

Ref. No.	Part No.	Part Name & Description	Pcs
		CABINET & ELECTRICAL PARTS	
1	PQKE10002Z1	TOP COVER	1
2	PQHD10011Z	SCREW	2
3	PQUS141Z	COIL SPRING	2
4	PQKV10006Z1	COVER-A, FRONT	1
5	PQKV10005Z1	COVER-B, FRONT	2
6	PQHR10031Z	CLAMPER-A	1
7	PQKF10018Z1	INSIDE CABINET	1
8	PQKK10018Z1	LID, ROM	1
9	PQMH10008Z	ANGLE, FRONT COVER	2
10	PQQT10125Z	CAUTION LABEL-A	1
11	PQHR10028Z	CLAMPER-B	2
12	PQHR10029Z	CLAMPER-C	2
13	XUC3VW	E-RING	1
14	PQMH10009Z	HINGE-A	2
15	PQMC10010Z	ANGLE, FG (TOP COVER)	1
16	PQMC10064Z	SHEET, TOP COVER	1
20	PQKM10021Z1	CABINET BODY	1
21	PQHR10032Z	COVER, FG SPRING	1
22	PQQT10470Z	CAUTION LABEL-B	1
23	PQQT10126X	CAUTION LABEL-C	1
24	PQMH10010Y	HINGE-B	1
25	PQMH10010Z	HINGE-C	1
26	PQMH10007Z	SPRING, FG	1
27	PQMC10009Z	ANGLE, FG (CABINET BODY)	1
28	PQGP10009Z1	PANEL, LED	1
29	PQGG10009Z1	GRILLE, LED	1
30	PQMH10026Z	FRAME, BELL TRANSFORMER	1
31	PQLT1U9M1A	BELL TRANSFORMER	1
32	PQMC10063Z	SHEET, CABINET BODY	1
33	PQGT10510Z	NAME PLATE	1

Ref. No.	Part No.	Value, Part Name & Description		Pcs
		ACCESSORIES AND PACKING MATERIALS		
A1	PQJA223Z	AC CORD		1
A2	PQJP1E1Z	PLUG		2
A3	PQJP1E2Z	PLUG		2
A4	PQHR10113Z1	COVER, TEL CORD		1
A5	PQHE10Z	MOUNTING BRACKET (CURL PLUG)		4
A6	PQHE5008Z	MOUNTING BRACKET (SCREW)		4
A7	PQQX10191Z	USERS GUIDE (FOR SLT)		1
A8	PQQX10190Y	USERS GUIDE		1
A9	PQQX10193Y	TEMPLATE		1
A10	XZB05X08A03	PROTECTION COVER (SCREW etc)		2
A11	XZB23X35A01	PROTECTION COVER (DOCUMENTS)		1
A12	PQQX10189Y	INSTALLATION MANUAL		1
A13	PQQX10496Y	PROGRAMMING TABLE		1
P1	PQPK10438Z	PACKING CASE		1
P2	PQPD10045Z	CUSHION, TOP		1
P3	PQPN10196Z	CUSHION, L/R		2
P4	PQPN10191Z	ACCESSORY BOX		1
		CPU BOARD PARTS		
PCB1	PQWP1TD1232X	CPU BOARD ASS'Y (RTL)		1
		(ICs)		
IC 1	PQVI68301FCG	IC		1
IC 2	PQVI620890F	IC		1
IC 3	PQVIMT8980DE	IC		1
IC 6~8	PQVIMC45503P	IC		3
IC 9	PQVIS7860SG	IC		1
IC10~12 ,14, 27	PQVINJM4558D	IC		5
IC13	PQVIPS520C	IC		1
IC15	PQVIHD75188P	IC	S	1
IC16	PQVIHD75189P	IC	S	1
IC17	PQVISN7H00S	IC	S	1
IC18	PQVISN7L00S	IC		1
IC19	PQWI2TD1232C	IC (ROM)		1
IC20, 21	PQWI1D1232C2	IC (ROM PACK)		1
IC22, 23	PQVITC5183SD	IC	S	2
IC24, 25	PQVIMB84256D	IC	S	2
IC26	PQVIMS6242BS	IC		1
IC29	PQVISN7L368M	IC		1
IC31	PQVISN7L640M	IC		1
IC32	PQVISN7L365S	IC		1
IC33, 34	PQVISN7L368M	IC		2
IC35	PQVISN7L365S	IC		1
		(TRANSISTORS)		
Q 5	PQVTDTA144EK	TRANSISTOR(SI)		1
Q 6	2SC2412K	TRANSISTOR(SI)		1
Q 7	2SC2412K	TRANSISTOR(SI)		1
Q 8	PQVTDTA143E	TRANSISTOR(SI)		1
Q 9	PQVTDTC144E	TRANSISTOR(SI)		1
Q10	2SA933	TRANSISTOR(SI) (or 2SA1317)		1
Q11	2SC2412K	TRANSISTOR(SI)		1
Q12	2SC2878	TRANSISTOR(SI)		1
Q13	2SC2412K	TRANSISTOR(SI)		1
Q14	2SC2878	TRANSISTOR(SI)		1
Q601, 603	PQVTDTA144E	TRANSISTOR(SI)		2
Q602, 604	PQVTDTC144EK	TRANSISTOR(SI)		2
		(DIODES)		
D1	MA4091	DIODE(SI)		1
D3	MA723	DIODE(SI)		1
D4	PQVDAK03	DIODE(SI)		1
D7~10	MA4068	DIODE(SI)		4
D11, 12	RLS71	DIODE(SI)		2
D13, 14	MA4030	DIODE(SI)		2
D15	MA4056	DIODE(SI)		1
D16, 17	RLS71	DIODE(SI)		2
D20, 21	MA723	DIODE(SI)		2

This replacement parts list is for KX-TD1232BX version only. Refer to the simplified manual (cover) for other areas.

Ref. No.	Part No.	Value	Pcs
		(RESISTORS)	
R 4	PQ4R10XJ471	470	1
R 5	PQ4R10XJ472	4.7K	1
R 6	PQ4R10XJ223	22K	1
R 7	PQ4R10XJ103	10K	1
R 8	PQ4R10XJ683	68K	1
R 9	PQ4R10XJ124	120K	1
R12	PQ4R10XJ393	39K	1
R13	PQ4R10XF1782	17.8K	1
R14	PQ4R10XJ104	100K	1
R15	PQ4R10XJ103	10K	1
R16	PQ4R10XJ274	270K	1
R17	PQ4R10XJ183	18K	1
R18	PQ4R10XJ103	10K	1
R19	PQ4R10XJ561	560	1
R20	PQ4R10XJ105	1M	1
R21	PQ4R10XJ563	56K	1
R22	PQ4R10XJ104	100K	1
R23	PQ4R10XJ104	100K	1
R24	PQ4R10XJ124	120K	1
R[illegible]	PQ4R10XJ823	82K	1
R[illegible]	PQ4R10XJ104	100K	1
R27	PQ4R10XJ104	100K	1
R28	PQ4R10XF1211	1.21K	1
R29	PQ4R10XF1211	1.21K	1
R30	PQ4R10XJ224	220K	1
R31	PQ4R10XF1401	1.4K	1
R32	PQ4R10XJ823	82K	1
R33	PQ4R10XJ472	4.7K	1
R34	PQ4R10XJ333	33K	1
R35	PQ4R10XJ104	100K	1
R36	PQ4R10XJ124	120K	1
R37	PQ4R10XJ104	100K	1
R38	PQ4R10XJ104	100K	1
R39	PQ4R10XJ124	120K	1
R40	PQ4R10XJ104	100K	1
R48	PQ4R10XJ333	33K	1
R50	PQ4R10XJ224	220K	1
R51	PQ4R10XJ333	33K	1
R52	PQ4R10XJ472	4.7K	1
R53	PQ4R10XJ104	100K	1
R[illegible]	PQ4R10XJ102	1K	1
R[illegible]	PQ4R10XJ104	100K	1
R61	PQ4R10XJ103	10K	1
R62	PQ4R10XJ223	22K	1
R65	PQ4R10XJ561	560	1
R66	PQ4R10XJ103	10K	1
R67	PQ4R10XJ103	10K	1
R68	PQ4R10XJ103	10K	1
R69	PQ4R10XJ103	10K	1
R70	PQ4R10XJ103	10K	1
R71	PQ4R10XJ103	10K	1
R72	PQ4R10XJ103	10K	1
R73	PQ4R10XJ103	10K	1
R74	PQ4R10XJ103	10K	1
R75	PQ4R10XJ103	10K	1
R76	PQ4R10XJ103	10K	1
R77	PQ4R10XJ103	10K	1
R78	PQ4R10XJ103	10K	1
R79	PQ4R10XJ103	10K	1
R83	ERDS1TJ151	150	1
R84	PQ4R10XJ152	1.5K	1
R85	PQ4R10XJ681	680	1
R87	PQ4R10XJ103	10K	1

Ref. No.	Part No.	Value	Pcs
R91~94	PQ4R10XJ103	10K	6
,96, 97	PQ4R10XJ103	10K	
R110-112	PQ4R10XJ470	47	3
R113	PQ4R10XJ103	10K	1
R114	PQ4R10XJ103	10K	1
R115	PQ4R10XJ222	2.2K	1
R116	PQ4R10XJ472	4.7K	1
R117	PQ4R10XJ103	10K	1
R118	PQ4R10XJ333	33K	1
R119	PQ4R10XJ103	10K	1
R120	PQ4R10XJ334	330K	1
R121	PQ4R10XJ222	2.2K	1
R122	PQ4R10XJ472	4.7K	1
R123	PQ4R10XJ103	10K	1
R124	PQ4R10XJ333	33K	1
R125	PQ4R10XJ103	10K	1
R126	PQ4R10XJ334	330K	1
R127	PQ4R10XJ472	4.7K	1
R128	PQ4R10XJ472	4.7K	1
R129	PQ4R10XJ470	47	1
R130	PQ4R10XJ470	47	1
R131	PQ4R10XJ470	47	1
R132	PQ4R10XJ470	47	1
R133	PQ4R10XJ470	47	1
R134	PQ4R10XJ390	39	1
R135	PQ4R10XJ470	47	1
R136	PQ4R10XJ470	47	1
R137	PQ4R10XJ470	47	1
R138	PQ4R10XJ101	100	1
R139	PQ4R10XJ101	100	1
R140	PQ4R10XJ101	100	1
R141	PQ4R10XJ101	100	1
R142	PQ4R10XJ101	100	1
R143	PQ4R10XJ101	100	1
R144	PQ4R10XJ101	100	1
R145	PQ4R10XJ101	100	1
R146	PQ4R10XJ470	47	1
R147	PQ4R10XJ470	47	1
R148	PQ4R10XJ470	47	1
R149	PQ4R10XJ470	47	1
R150	PQ4R10XJ470	47	1
R151	PQ4R10XJ470	47	1
R152	PQ4R10XJ470	47	1
R153	PQ4R10XJ470	47	1
R154	PQ4R10XJ470	47	1
R155	PQ4R10XJ470	47	1
R156	PQ4R10XJ470	47	1
R157	PQ4R10XJ470	47	1
R158	PQ4R10XJ470	47	1
R159	PQ4R10XJ470	47	1
R160	PQ4R10XJ470	47	1
R161	PQ4R10XJ390	39	1
R162	PQ4R10XJ390	39	1
R163	PQ4R10XJ560	56	1
R164	PQ4R10XJ560	56	1
R165	PQ4R10XJ560	56	1
R166	PQ4R10XJ560	56	1
R167	PQ4R10XJ560	56	1
R168	PQ4R10XJ560	56	1
R169	PQ4R10XJ560	56	1
R170	PQ4R10XJ560	56	1
R171	PQ4R10XJ560	56	1
R172	PQ4R10XJ560	56	1
R173	PQ4R10XJ560	56	1
R174	PQ4R10XJ560	56	1
R175	PQ4R10XJ560	56	1

This replacement parts list is for KX-TD1232BX version only. Refer to the simplified manual (cover) for other areas.

Ref. No.	Part No.	Value	Pcs
R176	PQ4R10XJ560	56	1
R177	PQ4R10XJ560	56	1
R178	PQ4R10XJ560	56	1
R179	PQ4R10XJ560	56	1
R180	PQ4R10XJ560	56	1
R181	PQ4R10XJ560	56	1
R182	PQ4R10XJ560	56	1
R183	PQ4R10XJ560	56	1
R184	PQ4R10XJ560	56	1
R185	PQ4R10XJ560	56	1
R186	PQ4R10XJ560	56	1
R187	PQ4R10XJ560	56	1
R188	PQ4R10XJ560	56	1
R189	PQ4R10XJ560	56	1
R190	PQ4R10XJ560	56	1
R191	PQ4R10XJ560	56	1
R192	PQ4R10XJ560	56	1
R193	PQ4R10XJ560	56	1
R194	PQ4R10XJ560	56	1
R195	PQ4R10XJ560	56	1
R196	PQ4R10XJ560	56	1
R197	PQ4R10XJ560	56	1
R198	PQ4R10XJ560	56	1
R199	PQ4R10XJ560	56	1
R200	PQ4R10XJ560	56	1
R201, 202, 203	PQ4R10XJ102	1K	3
R204	PQ4R10XJ103	10K	1
R205	PQ4R10XJ103	10K	1
R206	PQ4R10XJ103	10K	1
R207	PQ4R10XJ103	10K	1
R208	PQ4R10XJ103	10K	1
R209	PQ4R10XJ103	10K	1
R210	PQ4R10XJ103	10K	1
R211	PQ4R10XJ103	10K	1
R212	PQ4R10XJ103	10K	1
R213	PQ4R10XJ103	10K	1
R214	PQ4R10XJ103	10K	1
R215	PQ4R10XJ103	10K	1
R216	PQ4R10XJ103	10K	1
R217	PQ4R10XJ103	10K	1
R218	PQ4R10XJ103	10K	1
R219	PQ4R10XJ103	10K	1
R220	PQ4R10XJ223	22K	1
R221	PQ4R10XJ222	2.2K	1
R601, 602	PQ4R10XJ104	100K	2
R603	PQ4R10XJ331	330	1
R604	PQ4R10XJ151	150	1
R605	PQ4R10XJ824	820K	1
R606	PQ4R10XJ223	22K	1
R608	PQ4R10XJ124	120K	1
R609, 610, 611	PQ4R10XJ223	22K	3
J1, 3	PQ4R10XJ000	0	2
J 5	ERDS2TJ0T	0	1
J 6, 7	PQ4R10XJ000	0	2
		(CAPACITORS)	
C 1	EECFE5R5474	5.47M	1
C 2	ECEA1EU4R7	4.7	1
C 3	ECEA1HN3R3S	3.3	1
C 8, 9	ECQV1H104JZ	0.1	2
C11	PQCUV1H104ZF	0.1	1
C12	PQCUV1H101JC	100P	1
C13	PQCUV1H682KB	0.0068	1
C16	PQCUV1H101JC	100P	1
C17	PQCUV1H104ZF	0.1	1
C19	PQCUV1H101JC	100P	1

Ref. No.	Part No.	Value, Part Name & Description		Pcs
C20	PQCUV1H332KB	0.0033		1
C21	PQCUV1H104ZF	0.1		1
C22, 23	PQCUV1H101JC	100P		2
C24	PQCUV1H332KB	0.0033		1
C25, 26	PQCUV1H104ZF	0.1		2
C27	PQCUV1H102J	0.001		1
C28	PQCUV1H104ZF	0.1		1
C29	PQCUV1H101JC	100P		1
C30	PQCUV1H104ZF	0.1		1
C31	PQCUV1H102J	0.001		1
C33~38	PQCUV1H223KB	0.022		6
C35	PQCUV1H223KB	0.022		1
C36	PQCUV1H223KB	0.022		1
C37	PQCUV1H223KB	0.022		1
C38	PQCUV1H223KB	0.022		1
C39	PQCUV1H200JC	20P		1
C40	PQCUV1H223KB	0.022		1
C41	PQCUV1H223KB	0.022		1
C42	PQCUV1H223KB	0.022		1
C43	PQCUV1H223KB	0.022		1
C44	PQCUV1H223KB	0.022		1
C45	PQCUV1H223KB	0.022		1
C46	PQCUV1H223KB	0.022		1
C47	PQCUV1H223KB	0.022		1
C50	ECEA1EU331	330		1
C53	PQCUV1H180JC	18P		1
C54	PQCUV1H180JC	18P		1
C55	PQCUV1H223KB	0.022		1
C56	PQCUV1H223KB	0.022		1
C59	ECEA1HU010	1		1
C60	ECEA1HU010	1		1
C61	ECEA1HU010	1		1
C62	ECEA1HU010	1		1
C63	ECEA1HU010	1		1
C64	PQCUV1H223KB	0.022		1
C66	ECEA1AU101	100		1
C67	PQCUV1H223KB	0.022		1
C68	PQCUV1H223KB	0.022		1
C70	PQCUV1H223KB	0.022		1
C71	PQCUV1H223KB	0.022		1
C72	PQCUV1H223KB	0.022		1
C80	PQCUV1H200JC	20P		1
C81	PQCUV1H223KB	0.022		1
C82	PQCUV1H223KB	0.022		1
C83	PQCUV1H223KB	0.022		1
C84	PQCUV1H223KB	0.022		1
C85	PQCUV1H223KB	0.022		1
C86	PQCUV1H104ZF	0.1		1
C87	ECEA1VU330	33	S	1
C88	ECEA1HN2R2S	2.2		1
C89	PQCUV1H104ZF	0.1		1
C90	ECEA1VU330	33	S	1
C91	ECEA1HN2R2S	2.2		1
C92, 93	PQCUV1H101JC	100P		2
C94	PQCUV1H470JC	47P		1
C95	PQCUV1H470JC	47P		1
C96	PQCUV1H470JC	47P		1
C97	PQCUV1H223KB	0.022		1
C98	PQCUV1H223KB	0.022		1
C99	PQCUV1H223KB	0.022		1
C601, 602	ECEA1EU4R7	4.7	S	2
C603	PQCUV1H223KB	0.022		1
C604	PQCUV1H104ZF	0.1		1
		(TRANSFORMERS)		
T1	ETA14Y180AY	TRANSFORMER		1
T2~5	PQLT2D6A	TRANSFORMER	S	4

This replacement parts list is for KX-TD1232BX version only Refer to the simplified manual (cover) for other areas.

Ref. No.	Part No.	Part Name & Description		Pcs
		(COILS)		
L7~14	PQLE106	COIL		8
L21~23	PQVFTU50MT	CERAMIC FILTER		3
L24~27	PQVFCM04RC01	CERAMIC FILTER		4
		(JACKS)		
JAC1, 2	PQJJ1G1Z	JACK, PAGING		2
JAC3, 4	PQJJ1D3Z	JACK, EP		2
		(CONNECTORS)		1
CN1	PQJS64R15Z	CONNECTOR, 64P		1
CN4	PQJP2D70Z	CONNECTOR, 2P		1
CN9	PQJP20A08Z	CONNECTOR, 20P		1
CN12	PQJP6D70Z	CONNECTOR, 6P		1
		(BATTERY)		1
BAT	CR2354-1HF	LITHIUM BATTERY		1
		(SWITCHES)		
SW1	EVQ21409K	SWITCH		1
SW2	PQSS2A24Z	SWITCH		1
SW3	ESD11V120	SWITCH		1
		(CRYSTAL OSCILLATORS)		
X1	PQVCJ8192N8Z	CRYSTAL OSCILLATOR		1
X2	PQVCL3276N6Z	CRYSTAL OSCILLATOR		1
		(COMPONENTS COMBINATIONS)		
Z1, 2, 4~6	PQRSLD8X103J	RESISTOR ARRAY		5
EXTENSION BOARD PARTS				
PCB2	PQWP2TD1232C	EXTENSION BOARD ASS'Y (RTL)		1
		(ICs)		
IC201A~ IC201H	PQVIMC45503W	IC		8
IC202A~ IC202H	PQVINJM4558M	IC		8
IC203A~ IC203H	PQVINJM319V	IC		8
IC211	PQVI603830F	IC		1
IC213	PQVIMT8952BE	IC		1
IC215, 216	PQVICM8870FI	IC	S	2
IC217, 218	PQVIMC4051BF	IC	S	2
IC219	PQVISN7L14S	IC	S	1
IC220	PQVISN7L14S	IC	S	1
IC221	PQVISN7L14S	IC	S	1
IC222	PQVISN7L365S	IC		1
IC223	PQVISN7L86S	IC	S	1
IC224	PQVISN7L640M	IC		1
		(TRANSISTORS)		
Q200A~ Q200D	2SB1218A	TRANSISTOR(SI) (or 2SA1576R)	S	4
Q200E~ Q200H	2SD1819A	TRANSISTOR(SI) (or 2SA4081R)	S	4
Q201A~ Q201D, Q201F~ Q201H	2SB1218A	TRANSISTOR(SI)	S	7
Q201E	2SB1218A	TRANSISTOR(SI) (or 2SA1576R)	S	1
Q203A~ Q203H	2SB1322	TRANSISTOR(SI)		8
Q204A~ Q204H	2SD1994A	TRANSISTOR(SI)		8
Q205A~ Q205H	2SD1819A	TRANSISTOR(SI) (or 2SC4081R)	S	8
Q206A~ Q206H	2SD1819A	TRANSISTOR(SI) (or 2SC4081R)	S	8
Q207A~ Q207H	PQVTDTC143E	TRANSISTOR(SI)		8
Q208A~ Q208H	2SB1218A	TRANSISTOR(SI) (or 2SA1576R)	S	8

Ref. No.	Part No.	Value, Part Name & Description		Pcs
Q210	2SD2137	TRANSISTOR(SI)		1
Q211	UN5113	TRANSISTOR(SI)	S	1
Q213	2SD1819A	TRANSISTOR(SI) (or 2SC4081R)	S	1
Q214	UN5213	TRANSISTOR(SI)	S	1
Q215	2SD2137	TRANSISTOR(SI)		1
Q220A	UN5213	TRANSISTOR(SI)	S	1
Q221	PQVTDTC143E	TRANSISTOR(SI)		1
Q251	2SB1322	TRANSISTOR(SI) (or 2SB1237R)	S	1
Q252	UN5113	TRANSISTOR(SI)	S	1
		(DIODES)		
D203A	RLS71	DIODE(SI)		1
D204A~ D204H	RLS71	DIODE(SI)		8
D205A~ D205H	RLS71	DIODE(SI)		8
D206A~ D206H	RLS71	DIODE(SI)		8
D207A~ D207H	RLS71	DIODE(SI)		8
D210A~ D210H	RLS71	DIODE(SI)		8
D211A~ D211H	MA4039	DIODE(SI)		8
D212A	MA151WK	DIODE(SI) (or 1SS184)	S	8
D212H				
D213A~ D213H	1SS181	DIODE(SI)		8
D214A~ D214H	RLS71	DIODE(SI)		8
D220, 221 ,223, 225	RLS71	DIODE(SI)		4
D251	MA4056	DIODE(SI)		1
D252	RLS71	DIODE(SI)		1
		(RESISTORS)		
R200A~ R200H	PQ4R10XJ330	33		8
R201A~ R201H	PQ4R10XJ222	2.2K		8
R202A~ R202H	PQ4R10XJ222	2.2K		8
R203	PQ4R10XJ101	100		1
R204	PQ4R10XJ105	1M		1
R205A~ R205H	ERDS2TJ220	22		8
R206A~ R206H	ERDS2TJ680	68		8
R207A~ R207H	PQ4R10XJ682	6.8K		8
R208A~ R208H	ERDS2TJ220	22		8
R209A~ R209H	ERDS2TJ680	68		8
R210A R210H	PQ4R10XJ682	6.8K		8
R211A ~ R211H	PQ4R10XF3000	300		8
R212A~ R212H	PQ4R10XF2940	294		8
R213A~ R213H	PQ4R10XF3000	300		8
R214A~ R214H	PQ4R10XF7502	75K		8
R215A~ R215H	PQ4R10XF1003	100K		8
R216A~ R216H	PQ4R10XF4702	47K		8
R217A~ R217H	PQ4R10XF4702	47K		8
R218A~ R218H	PQ4R10XF1003	100K		8

This replacement parts list is for KX-TD1232BX version only. Refer to the simplified manual (cover) for other areas.

Ref. No.	Part No.	Value	Pcs
R219A~ R219H	PQ4R10XF1003	100K	8
R220A~ R220H	PQ4R10XF1003	100K	8
R221A~ R221H	PQ4R10XF1003	100K	8
R222A~ R222H	PQ4R10XF3000	300	8
R223A~ R223H	PQ4R10XF7502	75K	8
R224A~ R224H	PQ4R10XJ153	15K	8
R225A~ R225H	PQ4R10XJ333	33K	8
R226A~ R226H	PQ4R10XJ103	10K	8
R227A~ R227H	PQ4R10XJ473	47K	8
R228A~ R228H	PQ4R10XJ123	12K	8
R229A~ R229H	PQ4R10XJ333	33K	8
R230A~ R230H	PQ4R10XJ103	10K	8
R231A~ R231H	PQ4R10XJ102	1K	8
R232A~ R232H	PQRD2TJ102	1K	8
R233A~ R233H	PQ4R10XJ000	0	8
R234A~ R234H	PQ4R10XJ472	4.7K	8
R235A~ R235H	PQ4R10XJ472	4.7K	8
R236A~ R236H	PQ4R10XJ472	4.7K	8
R237A~ R237H	PQ4R10XJ472	4.7K	8
R238A~ R238H	PQ4R10XJ330	33	8
R239A~ R239H	PQ4R10XJ222	2.2K	8
R240A~ R240H	PQ4R10XJ222	2.2K	8
R241	PQ4R10XJ473	47K	1
R242	PQ4R10XJ682	6.8K	1
R243	PQ4R10XJ223	22K	1
R244	PQ4R10XJ472	4.7K	1
R245	PQ4R10XJ153	15K	1
R246	PQ4R10XJ152	1.5K	1
R247	PQ4R10XJ223	22K	1
R248A~ R248H	PQ4R10XJ471	470	8
R251	PQ4R10XJ103	10K	1
R252	PQ4R10XJ103	10K	1
R253	PQ4R10XJ103	10K	1
R254	PQ4R10XJ103	10K	1
R255	PQ4R10XJ393	39K	1
R256	PQ4R10XJ104	100K	1
R257	PQ4R10XJ334	330K	1
R258	PQ4R10XJ393	39K	1
R259	PQ4R10XJ104	100K	1
R260	PQ4R10XJ334	330K	1
R261	PQRD1TJ820	82 S	1
R262	PQ4R10XJ152	1.5K	1
R263	PQ4R10XJ152	1.5K	1
R264	PQ4R10XJ152	1.5K	1
R265, 266	PQ4R10XJ103	10K	2
R267	PQ4R10XJ101	100	1
R268	PQ4R10XJ101	100	1
R269	PQ4R10XJ101	100	1
R270	ERDS2TJ220	22	1
R270A~ R270H	PQ4R10XJ103	10K	8
R271	PQ4R10XJ682	6.8K	1
R272	PQ4R10XJ101	100	1
R273, 274	Not Used		
R275A~ R275H	PQ4R10XJ563	56K	8
R276A~ R276H	PQ4R10XJ560	56	8
R277A~ R277H	PQ4R10XJ560	56	8
R278A~ R278H	PQ4R10XJ560	56	8
R279A~ R279H	PQ4R10XJ560	56	8
R280	PQ4R10XJ223	22K	1
R285	PQ4R10XJ122	1.2K	1
R286	PQ4R10XJ152	1.5K	1
R290A~ R290H	PQ4R10XJ472	4.7K	8
R291A~ R291H	PQ4R10XJ472	4.7K	8
R292A~ R292H	PQ4R10XJ472	4.7K	8
R293	PQ4R10XF6801	6.8K	1
R294	PQ4R10XF1201	1.2K	1
R295A~ R295H	PQ4R10XJ101	100	8
R296A~ R296H	PQ4R10XJ220	22	8
R297A~ R297H	PQ4R10XJ220	22	8
R299A~ R299H	PQ4R10XJ101	100	8
J201~ J204	PQ4R10XJ000	0	4
J251A ~ J251H	PQ4R10XJ000	0	8
J253A~ J253H	PQ4R10XJ000	0	8
J255A~ J255H	PQ4R10XJ000	0	8
J257A~ J257H	PQ4R10XJ000	0	8
J259A ~ J259H	PQ4R10XJ000	0	8
		(CAPACITORS)	
C200A~ C200H	ECEA1HU2R2	2.2	8
C202A~ C202H	ECEA1HU2R2	2.2	8
C204A~ C204H	ECEA1HU100	10	8
C205A~ C205H	ECEA1EN100S	10	8
C206A~ C206H	ECEA1EN100S	10	8
C207A~ C207H	ECEA1HU3R3	3.3	8
C208A~ C208H	ECUV1H104MD	0.1 S	8
C209A~ C209H	PQCUV1H104ZF	0.1	8
C210A~ C210H	PQCUV1H104ZF	0.1	8

This replacement parts list is for KX-TD1232BX version only. Refer to the simplified manual (cover) for other areas.

Ref. No.	Part No.	Value, Part Name & Description		Pcs
C211A~ C211H	ECEA1HN4R7S	4.7		8
C212A~ C212H	PQCUV1H104ZF	0.1		8
C213A ~ C213H	PQCUV1H104ZF	0.1		8
C214, 215	Not Used			
C216A ~ C216H	ECEA1HU2R2	2.2		8
C217A ~ C217H	PQCUV1H680JC	68P		8
C218A~ C218H	PQCUV1H680JC	68P		8
C219A~ C219H	ECUV1H104MD	0.1	S	8
C220	ECEA1EU101	100		1
C220A~ C220H	ECUV1H393KB	0.039		8
C221	ECEA1EU101	100		1
C222A~ C222H	ECEA1HU100	10		8
C251~ 254	PQCUV1H223KB	0.022		4
C255	ECEA1VU330	33	S	1
C256	PQCUV1H221JC	220P		1
C257~259	PQCUV1H104ZF	0.1		3
C260	ECEA1ESS471U	470		1
C262~264	ECEA1VU330	33	S	3
C265	PQCUV1H104ZF	0.1		1
C270	ECEA1AU101	100		1
C272	PQCUV1H104ZF	0.1		1
C273	PQCUV1H104ZF	0.1		1
C280~285	PQCUV1H104ZF	0.1		6
C287-290	PQCUV1H104ZF	0.1		4
C292	ECEA1EU101	100		1
C295, 296	PQCUV1H104ZF	0.1		2
		(CONNECTORS)		
CN200	PQJS50A04Z	CONNECTOR, 50P		1
CN201	PQJS50R15Z	CONNECTOR, 50P		1
		(CHOKE COILS)		
L200A~ L200H	PQLQZM100K	CHOKE COIL	S	8
L201A ~ L201H	PQLQZM100K	CHOKE COIL	S	8
L202A~D	PQRPAR8R2	CHOKE COIL		4
L202E~H	PQLE106			4
L203A~ L203H	PQLE106	CHOKE COIL		8
		(RELAYS)		
RY200A, RY200B	PQSL44Z	RELAY		2
RY201A, RY202A~ RY202H	PQSL119Z	RELAY		9
		(TRANSFORMERS)		
T201A~	ETE13K79AY	TRANSFORMER		8

Ref. No.	Part No.	Value, Part Name & Description		Pcs
		(VARISTORS)		
ZR202A~ ZR202H	PQVDNV039D03	VARISTOR		8
ZR203A~ ZR203H	PQVDNV039D03	VARISTOR		8
ZR204A~ ZR204H	PQVDNV039D03	VARISTOR		8
ZR205A~ ZR205H	PQVDNV039D03	VARISTOR		8
		(FUSES)		
F200,201	PQBA1N15NMAL	FUSE		2
		(CERAMIC RESONATOR)		
X201	PQVBFC3584A1	CERAMIC RESONATOR		1

CO LINE BOARD PARTS

PCB3	PQWP3TD1232X	CO LINE BOARD ASS'Y (RTL)		1
		(ICs)		
IC101A~ IC101H	PQVINJM4558M	IC		8
IC102A~ IC102H	PQVIMC45503W	IC		8
IC111	PQVI63HB110	IC	S	1
IC112	PQVISN7L138M	IC		1
IC114	PQVISN7L138M	IC		1
IC116	PQVISN7L640M	IC		1
IC117	PQVISN7L08S	IC	S	1
IC120	PQVISN7L04S	IC	S	1
IC121	PQVISN7L14S	IC	S	1
IC122	PQVISN7L273M	IC		1
IC123	PQVISN7L14S	IC	S	1
		(TRANSISTORS)		
Q101A ~ Q101H	2SD1897	TRANSISTOR(SI)		8
Q102A~ Q102H	PQVTDTC143EK	TRANSISTOR(SI)		8
Q111	2SB1322	TRANSISTOR(SI) (or 2SB1238R)	S	1
Q112	UN5113	TRANSISTOR(SI)	S	1
Q120A~ Q120H	2SA1627	TRANSISTOR(SI)		8
		(DIODES)		
D101A~ D101H	PQVDS1YB40F1	DIODE(SI)		8
D102A~ D102H	PQVDHZS2B1	DIODE(SI)		8
D103A~ D103H	PQVDHZS2B1	DIODE(SI)		8
D104A~ D104H	MA3047	DIODE(SI)		8
D105A~ D105H	MA3047	DIODE(SI)		8
D108A~ D108H	RLS71	DIODE(SI)		8
D154	MA4056	DIODE(SI)		1
D155	MA723	DIODE(SI)		1
		(RESISTORS)		
R101A~ R101H	ERQN1VJ223	22K		8
R102A ~ R102H	PQ4R10XJ822	8.2K		8
R103A~ R103H	ERDS2TJ390	39		8
R104A~ R104H	PQ4R10XJ103	10K		8

This replacement parts list is for KX-TD1232BX version only. Refer to the simplified manual (cover) for other areas.

Ref. No.	Part No.	Value, Part Name & Description	Pcs
R105A~ R105H	PQ4R10XJ471	470	8
R107A~ R107H	PQ4R10XF1211	1.21K	8
R108A~ R108H	PQ4R10XJ821	820	8
R110A~ R110H	PQ4R10XF2323	232K	8
R111A~ R111H	PQ4R10XF1003	100K	8
R112A~ R112H	PQ4R10XF1003	100K	8
R113A~ R113H	PQ4R10XF1003	100K	8
R114A~ R114H	PQ4R10XF4702	47K	8
R115A~ R115H	PQ4R10XF1203	120K	8
R116A~ R116H	PQ4R10XF4702	47K	8
R118A~ R118H	ERDS2TJ122	1.2K	8
R119A~ R119H	PQ4R10XF1211	1.21K	8
R122A~ R122H	PQ4R10XJ222	2.2K	8
R125 ~132	PQ4R10XJ101	100	8
R153	PQ4R10XJ152	1.5K	1
R154	PQRD1VJ221	220	1
R155~160	PQ4R10XJ103	10K	6
R161	PQ4R10XJ101	100	1
R161A~ R161H	ERDS2TJ560	56	8
R162A~ R162H	PQ4R10XJ104	100K	8
R163A ~ R163H	PQRQ25VJ5R6	5.6	8
R164A~ R164H	ERDS2TJ272	2.7K	8
R165A~ R165H	PQ4R10XJ471	470	8
J100A	ERDS2TJ0T	0	1
J151~ 154	PQ4R10XJ000	0	4
J155A~ J155H	PQ4R10XJ000	0	8
J156A~ J156H	PQ4R10XJ000	0	8
		(CAPACITORS)	
C101A ~ C101H	ECKDKC222KB	0.0022	8
C102A~ C102H	ECQE2474KF	0.47	8
C103A~ C103H	ECEA1HU100	10	8
C104A~ C104H	ECEA1HU220	22	8
C105A~ C105H	PQCUV1H102J	0.001	8
C106A~ C106H	PQCUV1H563MD	0.056	8
C107A~ C107H	PQCUV1H820JC	82P	8
C108A~ C108H	ECUV1H104MD	0.1	8
C109A~ C109H	PQCUV1H223KB	0.022	8
C110A~ C110H	PQCUV1H223KB	0.022	8

Ref. No.	Part No.	Value, Part Name & Description		Pcs
C111A~ C111H	ECEA1HUR47	0.47		8
C120	PQCUV1H101JC	100P		1
C151	ECEA1HU330	33		1
C152	ECEA1HU330	33		1
C153	ECEA1HU330	33		1
C154	ECEA1HKS010	1		1
C155	ECEA1ESS331	330		1
C156	ECEA1AU222	2200		1
		(CONNECTORS)		
CN101	PQJS50R15Z	CONNECTOR, 50P		1
CN108~11	PQJJ1TB25Y	JACK, TEL		4
		(COILS)		
L101A~ L101H	PQLE106	COIL		8
L102A~ L102H	PQLE106	COIL		8
L103A~ L103H	PQLE106	COIL		8
L104A~ L104H	PQLE106	COIL		8
		(PHOTO ELECTRIC TRANSDUCERS)		
PC101A~ PC101H	ON3181R	PHOTO ELECTRIC TRANSDUCER		8
PC102A~ PC102H	PQVITLP627	PHOTO ELECTRIC TRANSDUCER		8
		(RELAYS)		
RY101A~ RY101H	PQSL41Z	RELAY		8
		(VARISTORS)		
SA101A~ SA101H	PQVDB1A351	VARISTOR (SURGE ABSORBER)		8
SA102A~ SA102H	PQVDB1A351	VARISTOR (SURGE ABSORBER)		8
SA103A~ SA103H	PQVDB1A351	VARISTOR (SURGE ABSORBER)		8
SA104	ERZC10DK681	VARISTOR		1
ZR101A~ ZR101H	ERZC07DK820	VARISTOR	S	8
		(TRANSFORMERS)		
T101A~ T101H	ETA14Y85AY	TRANSFORMER	S	8

SMDR / LED BOARD PARTS

PCB4	PQWP4TD1232C	SMDR / LED BOARD ASS'Y (RTL)		1
		(DIODE)		
LED	LN242RP	DIODE(SI)	S	
		(TRANSISTORS)		
R700~703	ERDS2TJ821	820		4
		(CAPACITORS)		
C700~703	ECKD1H392MD	0.0039	S	4
		(CONNECTORS)		
CN701	PQJS06R49Z	CONNECTOR, 6P		1
CN702	PQJS25P31Z	SOCKET, 25P		1
CN703	PQJS02R48Z	CONNECTOR, 2P		1

This replacement parts list is for KX-TD1232BX version on Refer to the simplified manual (cover) for other areas.

Ref. No.	Part No.	Value, Part Name & Description	Pcs
		MOTHER BOARD PARTS	
PCB5	PQWP5TD1232C	MOTHER BOARD ASS'Y (RTL)	1
		(CONNECTORS)	
CN402	PQJP64A09Z	CONNECTOR, 64P	1
CN403	PQJP50A09Z	CONNECTOR, 50P	1
CN404	PQJP50A09Z	CONNECTOR, 50P	1
CN405	PQJP50A09Z	CONNECTOR, 50P	1
CN406	PQJP60A09Z	CONNECTOR, 60P	1
CN407	PQJP60A09Z	CONNECTOR, 60P	1
CN408	PQJP60A09Z	CONNECTOR, 60P	1
CN409	PQJP50A09Z	CONNECTOR, 50P	1
CN410	PQJP34A09Z	CONNECTOR, 34P	1
CN411	PQJP40A09Z	CONNECTOR, 40P	1
		(COMPONENTS COMBINATIONS)	
RA401	PQRS8B8332J	RESISTOR ARRAY	1
RA402	EXBP88472K	RESISTOR ARRAY S	1
		POWER SUPPLY UNIT PARTS	
PCB6	PQWP6TD1232X	POWER SUPPLY BOARD ASS'Y (RTL) ⚠	1
		(CHASSIS & ELECTRICAL PARTS)	
90	PQQT4164Z	CAUTION LABEL	1
91	PQMC10053Z	SHIELD COVER ⚠	1
92	PQMC10052Z	SHIELD CASE ⚠	1
93	PQHR447Z	SPACER-A	1
94	PQHR10178Z	SPACER-B	1
95	PQHR10179Z	SPACER-C	1
96	PQJS02R46Z	CONNECTOR, 2P ⚠	1
97	PQJP04R07Z	CONNECTOR, 4P	1
98	PQJP3A3Z	SOCET, AC	1
99	EST15304T	SWITCH, POWER ⚠	1
100	PQMH10027Z	ANGLE, POWER SW ⚠	1
101	PQJV3Z	HOLDER, FUSE ⚠	1
102	XBA2C25TB0;	FUSE ⚠	1
103	PQQT10469Y	FUSE LABEL ⚠	1
		(ICs)	
IC400	PQVISTK73908	IC	1
IC450	PQVISTK732C	IC	1
IC451	PQVIHLD05003	IC	1
IC452	PQVILA6500	IC	1
		(TRANSISTOR)	
Q450	2SC4641	TRANSISTOR(SI)	1
		(DIODES)	
D400	PQVDD5SB40	DIODE (SI) ⚠	1
D401	PQVDERD3805L	DIODE (SI) ⚠	1
D402	PQVDRD13FB	DIODE(SI)	1
D450	PQVDRD6.2FB	DIODE (SI)	1
D451	PQVDC25P30F	DIODE (SI)	1
D452	PQVDC25P30F	DIODE (SI)	1
D453	MA4057M	DIODE(SI) ⚠	1
D454	PQVDD10SC4M	DIODE (SI)	1
D455	PQVDD10SC4M	DIODE (SI)	1
		(RESISTORS)	
R401	ERDS1TJ474	470K	1
R402	ERDS1TJ474	100K	1
R403	ERG3SJ683	68K	1
R404	ER016CKF1801	1.8K	1
R405	ERF5TKR22M	0.22	1
R406	ER016CKF4700	470	1
R407	ER016CKF5110	511	1
R408	ERG3SJ101	100	
R409	ERDS1TJ104	100K	1

Ref. No.	Part No.	Value, Part Name & Description	Pcs
R450	ERDS2TJ222	2.2K	1
R451	ERDS2TJ122	1.2K	1
R453	ERDS2TJ562	5.6K	1
R454	ERDS2TJ472	4.7K	1
R455	ERG3SJ271	270	1
R456	ERDS2TJ100	10	1
R457	ERF5TLK75M	700K	1
R458	ERDS2TJ272	2.7K	1
R459	ERDS2TJ392	3.9K	1
R460	PQRF2TLK50M	5	1
R462	ERDS2TJ562	5.6K	
R463	ERDS2TJ472	4.7K	1
R464	ERDS2TJ2R2	2.2	1
R465	ERG2SJ101	100	1
R466	ERDS2TJ390	39	1
R467	ERDS2TJ102	1K	1
R469	ER016CKF2561	256	1
R470	ER016CKF2701	2.7K	1
R471	ER016CKF1522	15.2K	1
		(CAPACITORS)	
C400	ECQU2A684MX	0.68	1
C401, 402, 403	ECKDKC472KB	0.0047 ⚠	3
C404	ECKDKC332KB	0.0033 ⚠ S	1
C405, 406	ECKWRS472ME	0.0047 ⚠	2
C407	ECKDKC332KB	0.0033 ⚠ S	1
C408, 409	EC0S2GB181BA	180P ⚠	2
C410	ECKD3A221KBN	220P	1
C411	ECQE6224RJ	0.22 ⚠	1
C412	ECQE10152RK	0.0047 ⚠	1
C414	ECQB1H222JF	0.0022	1
C415	ECQB1H392JF	0.0039	1
C416	ECKZ3A101KB	100P	1
C417	ECQE1H683JZ	0.068	1
C450	ECEA1VFG332	3300	1
C452	ECQB1H102JZ	0.001 S	1
C454	ECEA1JFG102	1000	1
C455	ECEA1JFG102	1000	1
C456	ECEA1VFG331	330	1
C457	ECEA1HGE010	1	1
C458	ECEA1JFG102	1000	1
C459	ECQB1H102JZ	0.001 S	1
C460	ECEA1EFG102	1000	1
C461	ECEA1HGA0R1	0.1	1
C462	ECEA1CFG102	0.001	1
C463	ECQV1H104JZ	0.1	1
C464	ECEA1HGE100	10	1
C465	ECQV1H104JZ	0.1	1
C467	ECEA1EGE101	100	1
C468	ECEA1VFG101	100	1
		(VARISTOR)	
SA400	ERZC14DK471U	VARISTOR ⚠	1
		(VARIABLE RESISTORS)	
VR450	EVMF5S00B23	SEMI-FIXED RESISTOR, 2KΩ (B)	1
VR451	EVMF5S00B23	SEMI-FIXED RESISTOR, 2KΩ (B)	1
		(CONNECTORS)	
CN400	PQJP2D98Z	CONNECTOR, 2P	1
CN401	PQJS07R50Z	CONNECTOR, 7P	1
CN402	PQJP4D30Z	CONNECTOR, 4P	1
CN403	PQJP4D46Z	CONNECTOR, 7P	1
		(COMPONENT COMBINATIONS)	
CR400, 401	PQVDMGC4R3R2	COMPONENT COMBINATION ⚠	2

This replacement parts list is for KX-TD1232BX version only. Refer to the simplified manual (cover) for other areas.

Ref. No.	Part No.	Part Name & Description	Pcs
		(THYRISTOR)	
SCR450	PQVDTCSF5B41	THYRISTOR	1
		(COILS)	
L401	ELF18D450M	COIL ⚠	1
L400	ELF18D850C	COIL ⚠	1
L455	PQLE127	COIL	1
L450	PQLE128	COIL	1
L451	PQLE129	COIL	1
L452	PQLE72	COIL	1
L453	PQLE94	COIL	1
L454	PQLE94	COIL	1
		(TRANSFORMER)	
T400	ETS42AB128AC	TRANSFORMER ⚠	1
		(PHOTO ELECTRIC TRANSDUCER)	
PC400	PQVIPC817CD	PHOTO COUPLER ⚠	1
		(THERMISTOR)	
TH401	PQRTD0WFL5R0	THERMISTOR ⚠	1
		(FUSE)	
F450	XBA1C40N1001	FUSE ⚠	1
		FIXTURES AND TOOL	
EC1	PQZZ64K2Z	EXTENSION CORD, 64P	1
EC2	PQZZ60K1Z	EXTENSION CORD, 60P	1
EC3	PQZZ50K2Z	EXTENSION CORD, 50P	1
EC4	PQZZ40K1Z	EXTENSION CORD, 40P	1
EC5	PQZZ34K1Z	EXTENSION CORD, 34P	1
		Note: Extension cords are useful for servicing. (They make servicing easy.)	